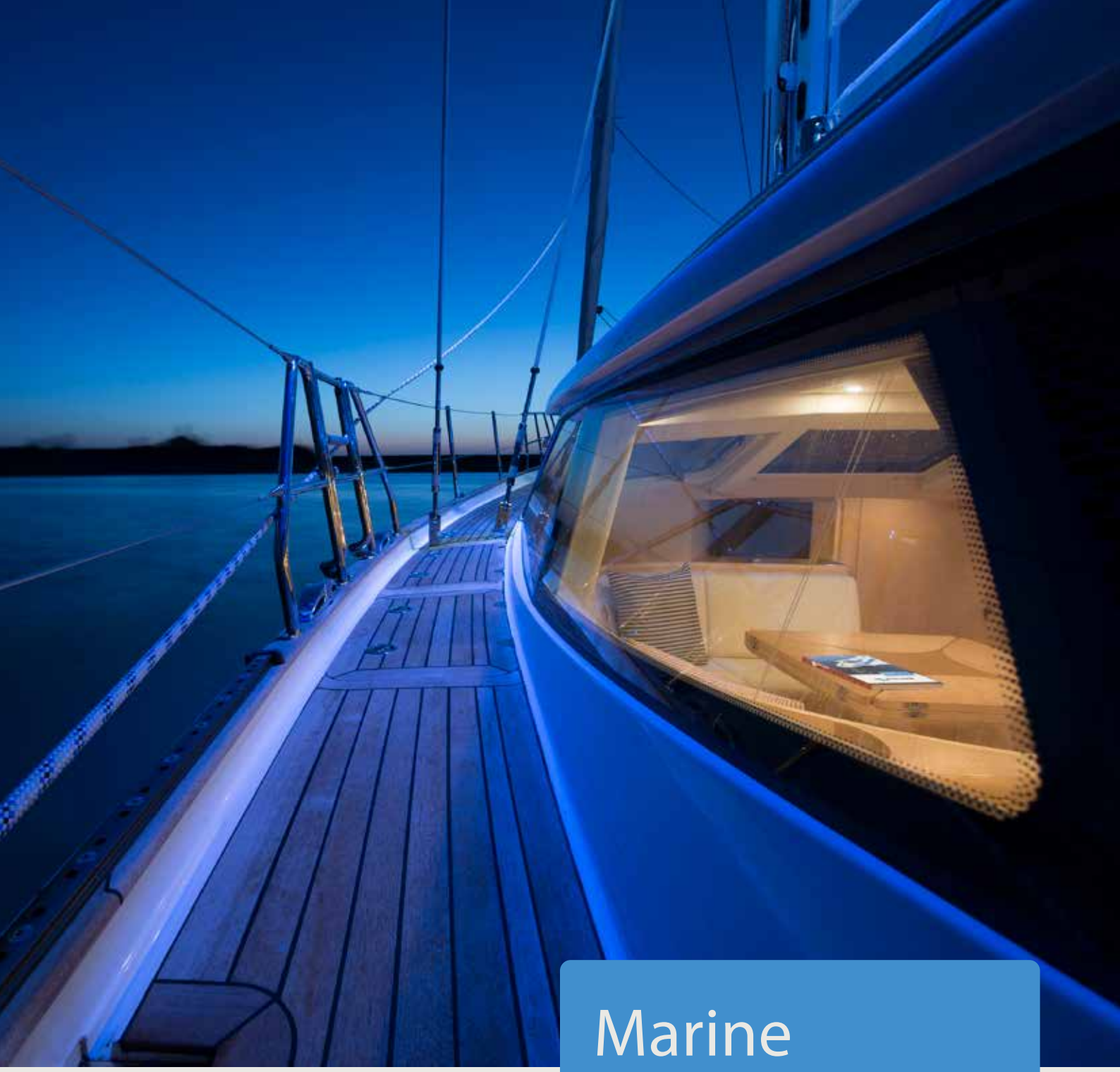

Marine

victron energy
BLUE POWER

RESCUE ZONE

INDEX

Introduction 4
Application examples 5
Sailing yacht Elektra 6
Motor yacht Nordhavn 68 8
Systems 10
Marine MFD Glass bridge integration 14
Accessories 16
Tools 18
Technical information 20
About Victron Energy 110

Marine

Whether you sail for fun or on a professional basis, it is of the utmost importance to have a reliable power supply for all the electrical equipment to properly function, even in the middle of the sea. Victron Energy offers a broad range of products that are extremely suitable for your onboard power system. We proldly present you our modern translation for freedom and independence.

Our products are being used in many different kinds of vessels: sailing yachts, cruise ships, sloops, tugboats, motor boats and container ships. To give you an idea of the possibilities of the use of our products, we gathered a few application examples.

Sailing yacht Elektra

Motor yacht Nordhavn 68

Sailing yacht Elektra

Elektra

The electric propulsion sailing yacht Elektra is an example of a retail customer that chose to use Victron Energy products because we at Victron have a complete range of the products that were needed, along with good online technical information and support; all without having to go to multiple suppliers. And the idea that our products are integrated and can easily be added to or combined with the customer's personal boat project needs was also a big plus.

More power needed

As he got used to his original basic system he realised he needed more battery power for house loads rather than tapping off the old AGM propulsion bank, so a separate house bank of 2 x 130 Ah AGMs in series was fitted along with a 24/12 40A DC-DC converter. To bring the charge rate of this 24V house bank up a Blue Power 24V/12A IP67 Battery Charger was also added. Together with the 24/800/16 MultiPlus this gave a combined and decent charge rate of 28A (672 Watts) for the house bank. This also gave the added bonus of charger redundancy and choices for slower and faster charging. The propulsion bank was then upgraded to Lithium, as they are excellent at handling high loads, plus an extra Blue Power IP22 16A charger was added to the 25A Phoenix charger giving an improved and combined charge rate of 41A (1050 Watts).

MultiPlus magic

There can be good reasons for choosing a smaller Multi, depending on the type of appliances you might run from it's inverter. Instead of running typically larger sized home appliances on his boat, the customer opted for lower-rated appliances which are kinder to a small house battery bank.

The Honda 1kVA generator shown in the photo is then a perfect partner for the compact 24/800/16 MultiPlus as when the AC load is greater than the 900 Watt continuously rated generator power its 800 Watt inverter part seamlessly kicks in through a fast transfer switch, to supplement that generator power, by taking the additional power from the house batteries; making for a total of 1700 Watts of 230V AC power. This allowed the customer to 'undersize' the generator for such short term higher loads, negating the need to purchase a larger 2kVA generator.

Monitoring and control

Adding a Color Control GX to the existing BMV battery monitors gave the customer additional monitoring and control; perfect partners. Together with an internet connection Elektra's data is also automatically uploaded to the free VRM Portal website.

Remote console

Furthermore there is no need to be concerned about battery SOC, as the customer can leave his boat at any point and control the system chargers remotely via a Smartphone or Laptop. This is called 'Remote Console', an example of which is shown below.

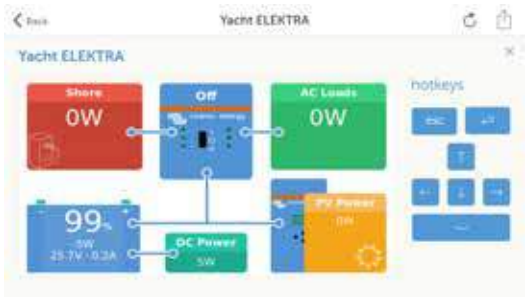

System components

The photo above shows the 2 x 12.8V 200 Ah Lithium-iron-phosphate (LiFePO4) propulsion batteries with cell balancing and BMS (shown centre).

Other system components from front to back on the left - Load & Charge under/over voltage cut off relays. Top left 1 x 10A and 1 x 6A 230V shore power breaker with galvanic isolator, then the electric motor controller box with solenoid and BMV-702 system shunt and at the rear a 600 Watt Phoenix charger.

Right from front - 12A extra charger for AGM house bank, 16A extra charger for Lithium propulsion bank, 75/15 MPPT Solar Charger Controller, and a 50 Watt tube heater behind the auto fire extinguisher to keep moisture at bay in the propulsion space.

Motor yacht Nordhavn 68

US, California: Pacific Asian Enterprises/Nordhavn Yachts

This 68 feet (20.73 meters) motor yacht is the forward pilothouse model of the Nordhavn 68 series. Everything you need for a comfortable stay is on board of this yacht: a large saloon, an outdoor living space, a galley, a laundry room, a master cabin and guest cabins. The rooms on board of the Nordhavn 68 series are finished in teak.

Appliances

The yacht is modernly decorated and equipped with a long list of comfort and convenience features: the galley is fullly equipped with first-rate appliances, including a Sub-Zero side-by-side refrigerator/freezer and GE cook top and stainless steel convection wall oven. In the living area and in the cabins are large plasma TVs installed.

Victron equipment

3 x Quattro 24/5000/120-50/30
Digital Multi Control Panel

Specifications:

LOA:	68' / 20.73 M
LWL:	63' 2 ' / 19.25 M
BEAM:	20' 4" / 6.2 M
DRAFT:	6' 10" / 2.08 M
DISPLACEMENT:	190,000 lbs / 86.10 MT
HP:	425 hp @ 1,900 rpm

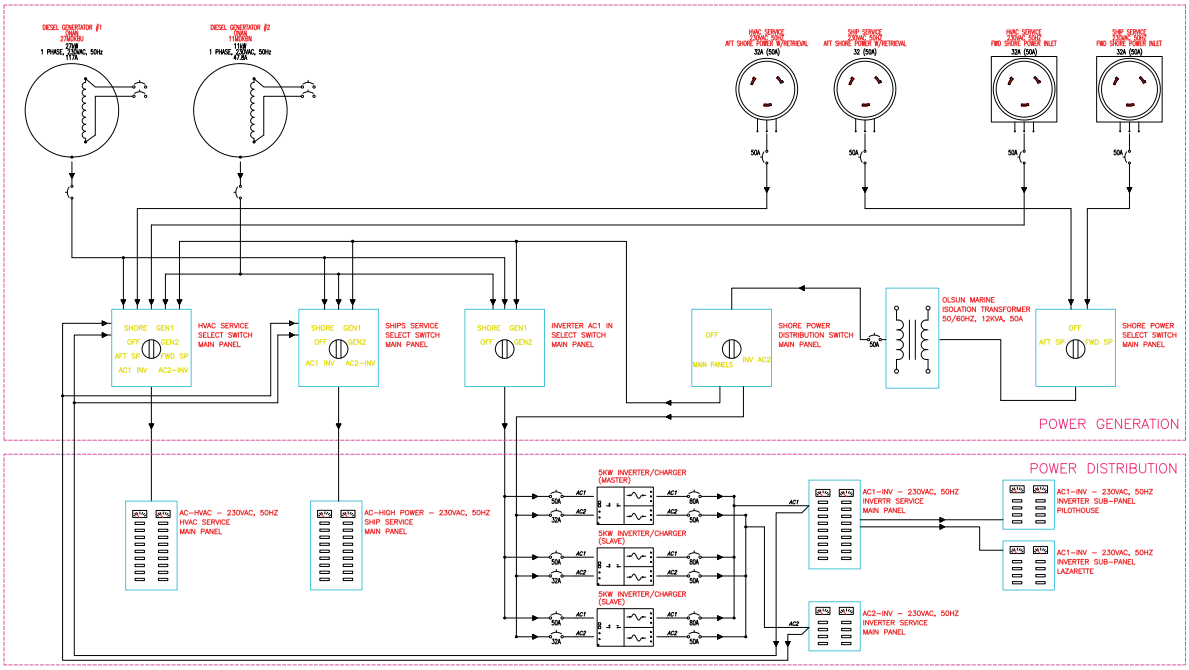

Photos: Stephen Cridland

There are many ways to build a Victron Energy system. Here are a few examples of different systems, from a simple system with only DC consumers to larger parallel and three-phase systems.

1. Simple system with only DC consumers

The battery charger charges the battery and functions as a power supply for the consumers.

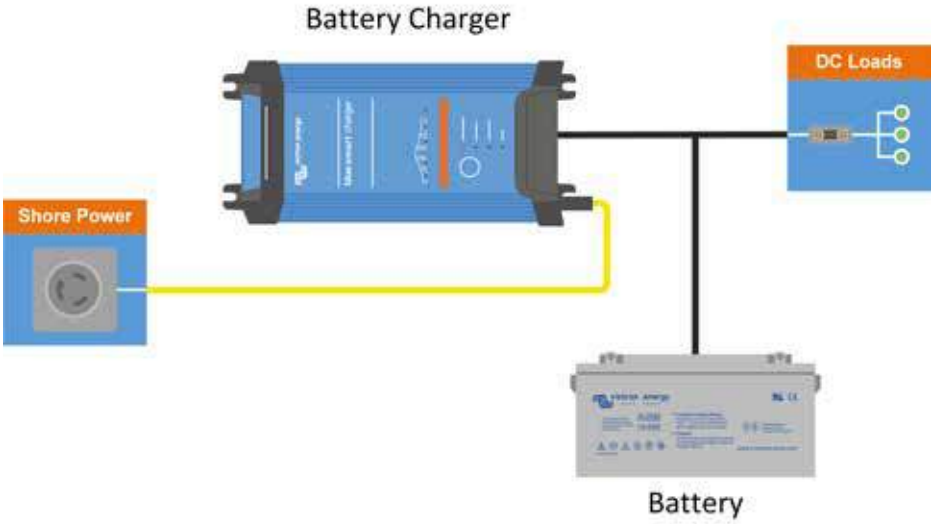

2. System with inverter

This system contains an inverter to ensure a supply of 230VAC at all times. Many charger models have three outputs which allow for several battery groups to be charged separately.

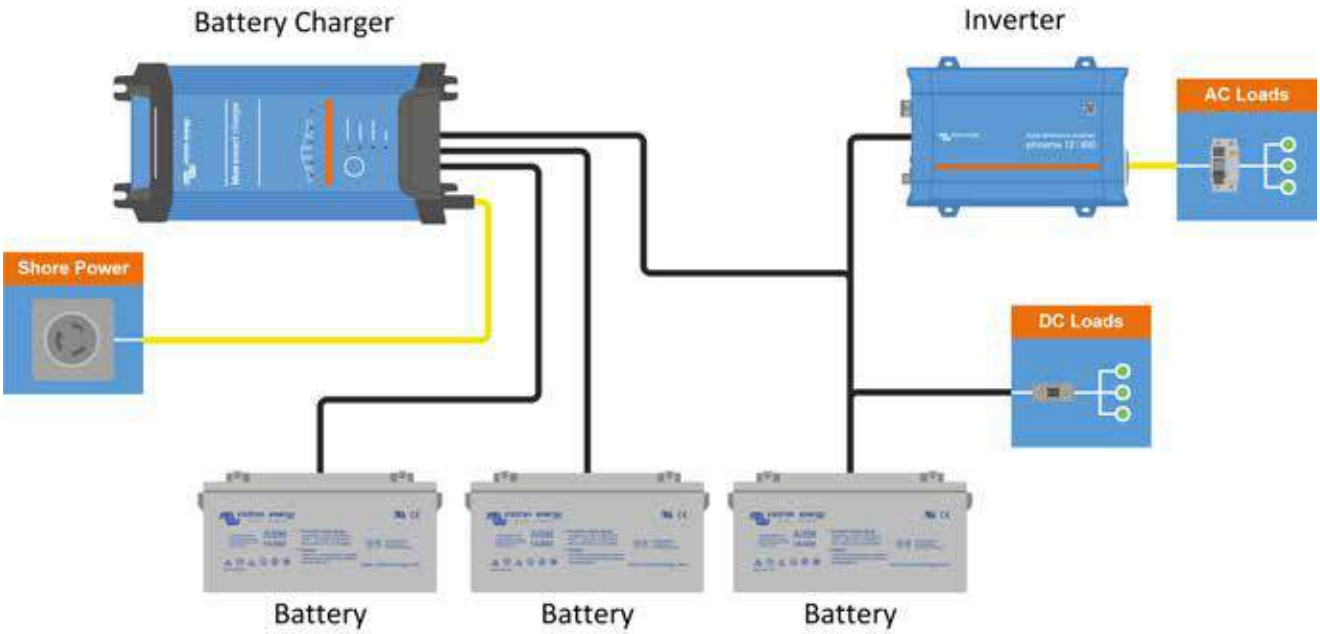

3. Multi-functional

The MultiPlus is a charger and inverter in one. It can function as a UPS (Uninterruptable Power Supply) to ensure power supply when the input power source fails. The MultiPlus also offers several other functional advantages such as PowerControl and PowerAssist.

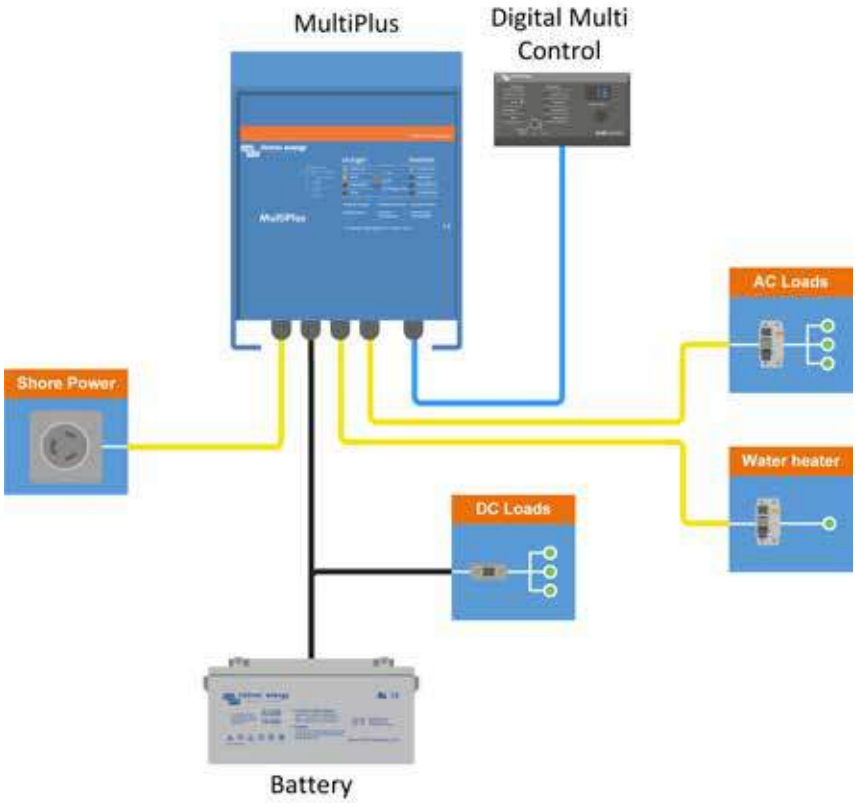

PowerAssist: boosting the capacity of shore or generator power

This unique Victron feature allows the MultiPlus to supplement the capacity of the shore or generator power. Where peak power is so often required only for a limited period, the MultiPlus will make sure that insufficient shore or generator power is immediately compensated with power from the battery. When the load reduces, the spare power is used to recharge the battery bank.

It is therefore no longer necessary to size a generator on the maximum peak load. Use the most efficient size generator instead.

Note: this feature is available in both the MultiPlus and the Quattro.

4. System with generator

The Quattro has the same functions as the MultiPlus, but with an extra addition: a transfer system which can be directly connected to shore power and a generator.

MultiPlus vs Quattro

The MultiPlus and Quattro products play a central role in both AC and DC systems. They are both powerful battery chargers and inverters in one box.

The amount of available AC sources is the deciding factor when choosing between the Quattro and the Multi.

The big difference is that a Quattro can take two AC sources, and switch between them based on intelligent rules. It has a built-in transfer-switch. The MultiPlus can take only one AC source.

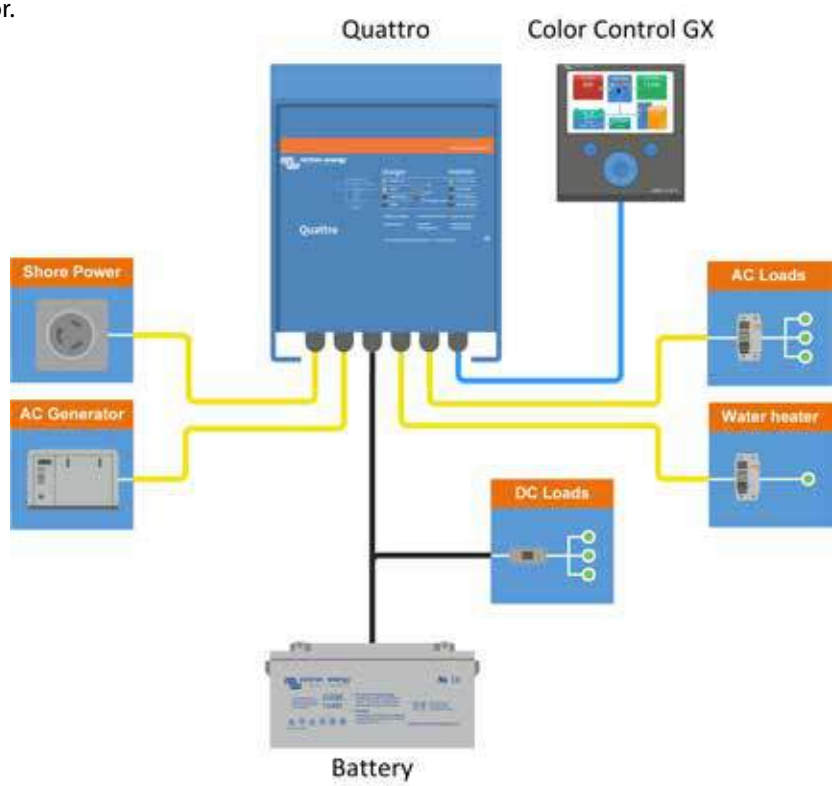

5. Using a DC Generator

In this MultiPlus-based system example the generator directly charges the batteries and/or feeds the inverters. This system offers a lot of advantages such as weight reduction and comfort.

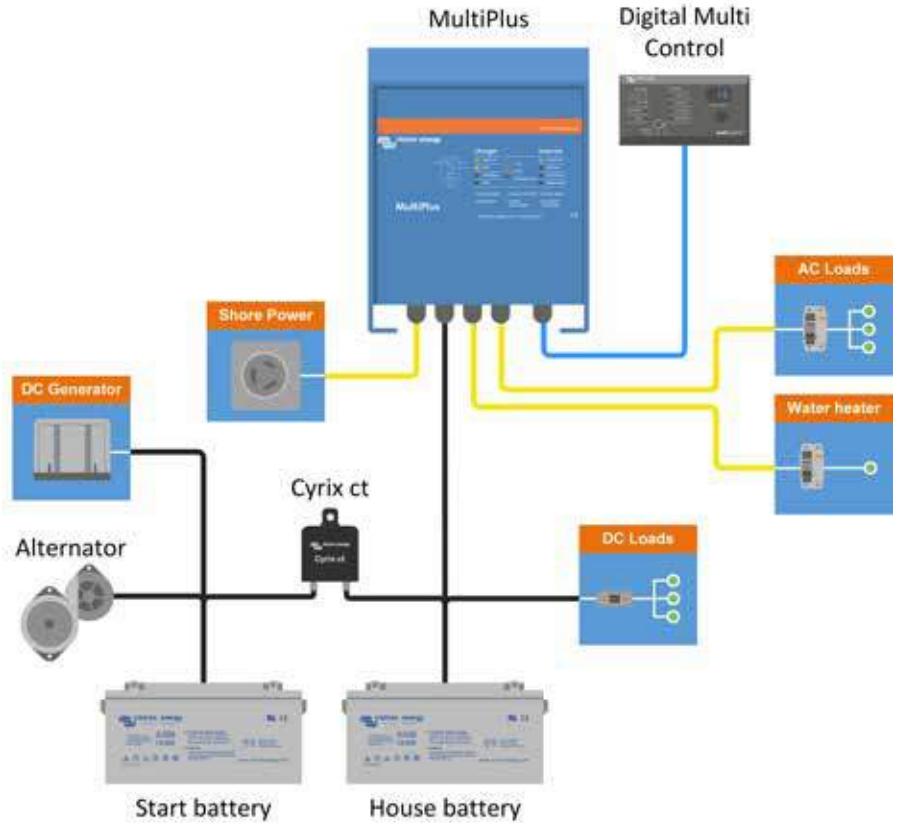

6. Using an AC Generator

This system example is based on a Quattro, which forms the heart of the system. Depending on how high the demand for power is, the Quattro will choose between battery-, shore- and generator power.

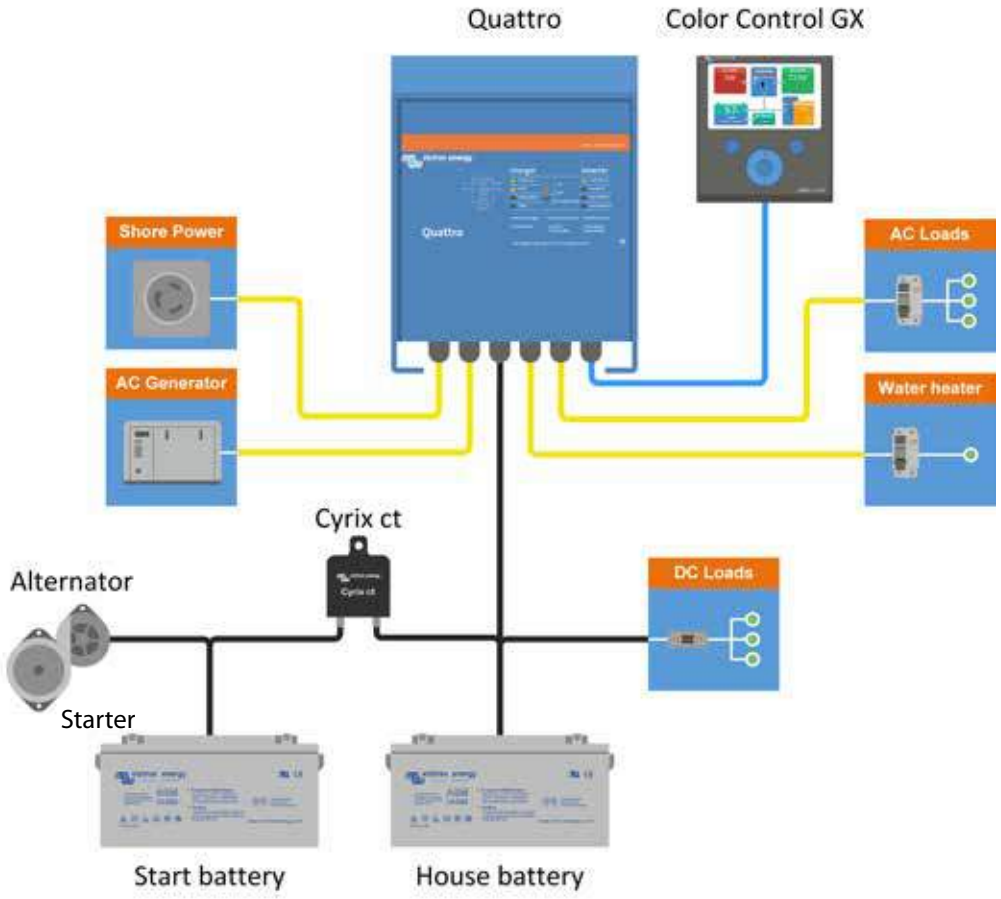

7. Parallel system

Our inverters, Multis and Quattros can be paralleled to meet higher power requirements. A simple setting with our VEConfigure configuration software is sufficient.

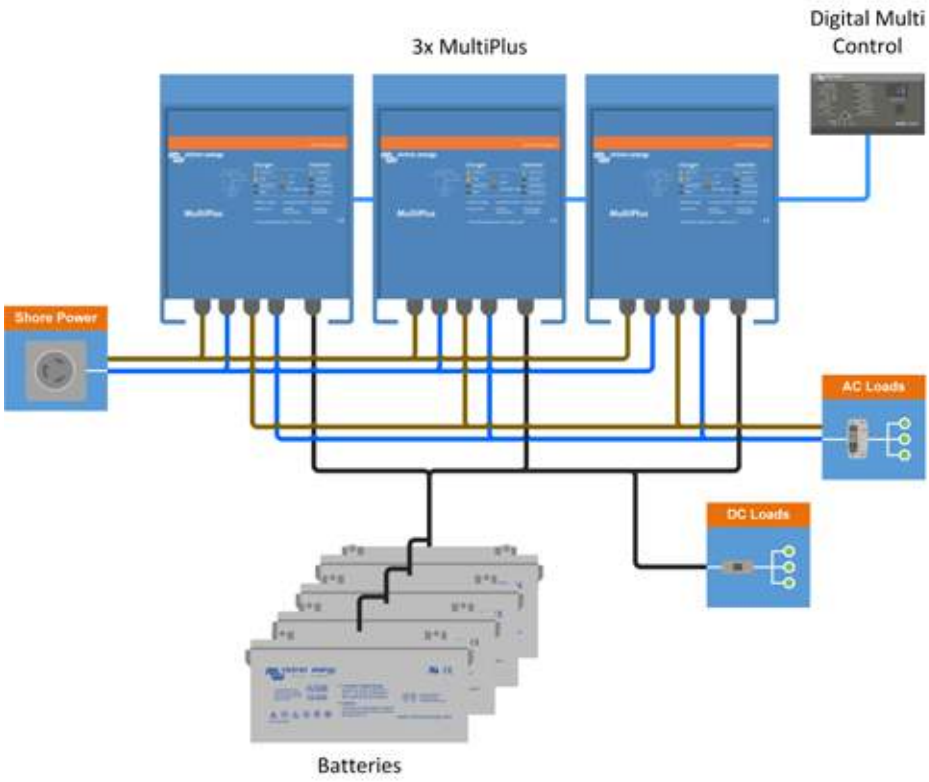

Easy to configure

Configuring parallel and three phase systems is easy. Our VEConfigure software tool allows the installer to put components together, without any hardware hanges or DIP switches. Just using standard products.

8. Three-phase system

Similar to connecting units in parallel they can also be connected in split-phase and three-phase configurations.

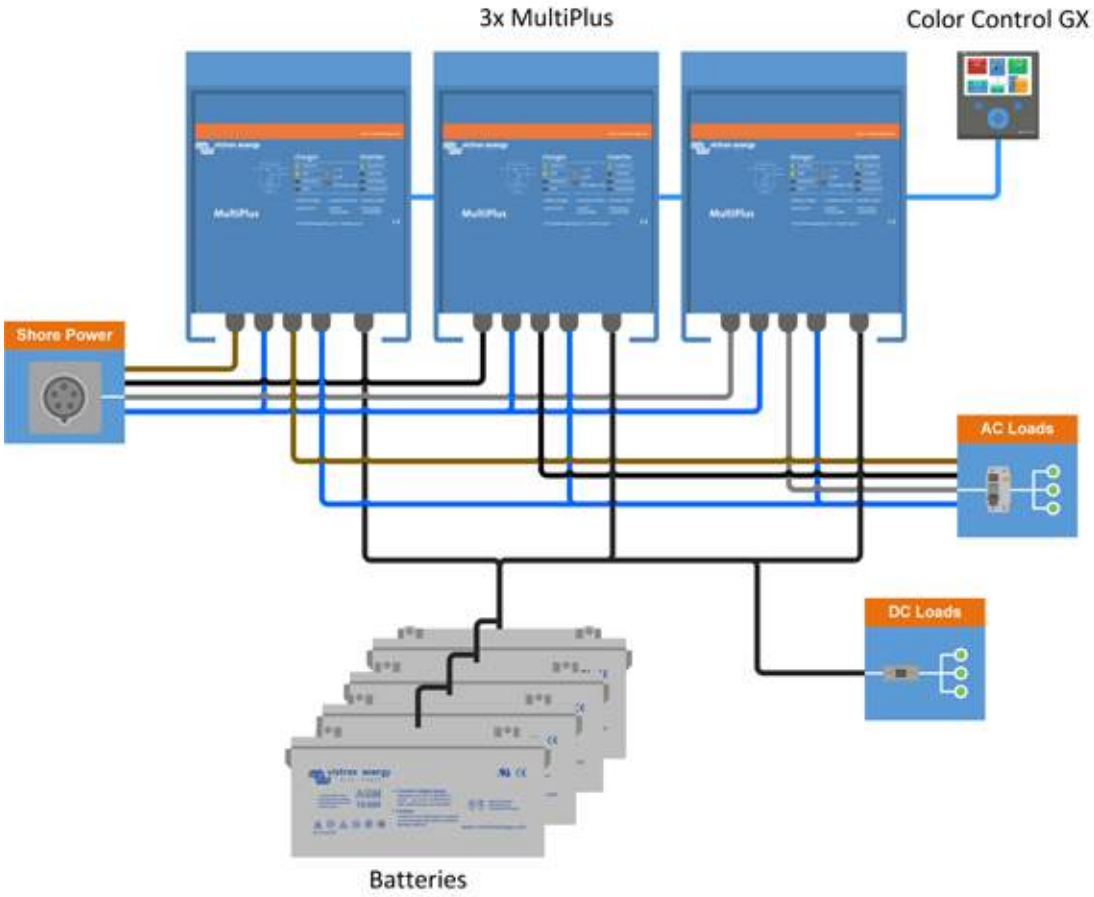

Marine MFD Glass bridge integration

Introduction & requirements

A Glass Bridge is a MFD (Multi-Functional Display) that integrates a boat's systems and navigation status into a large screen or screens at the helm of the vessel, so doing away with multiple gauges, brackets and wiring complications.

A Victron system can be easily integrated into Glass Bridge presentation by connecting the display to a Victron GX device with a network cable. Scan this QR code for more information:

Victron Integrates with:

LOWRANCE®

Raymarine®

GARMIN™

SIMRAD

B&G

Functionalities:

- Monitor shore power and generator status.
- Monitor battery status for one or more batteries. By using the voltage of for example battery chargers, it can also visualise secondary batteries such as Generator starter batteries.
- Monitor the power conversion equipment: chargers, inverters, inverter/chargers.
- Monitor AC loads, and DC loads.
- Control shore power input current limit.
- Control the inverter/charger: switch it off, on, or set it to charger-only.
- Optionally open the Victron Remote Console panel; allowing access to further parameters.

Power equipment compatibility:

- All Victron inverter/chargers: From a 500VA single phase device up to a large 180kVA three phase-system, including Multis, Quattros, 230VAC and 120VAC models.

Battery Monitors: BMV-700, BMV-702, BMV-712 Smart and newer, Lynx Shunt VE.Can, Lynx Ion BMS.

Requirements:

- Battery system.
- Victron inverter/charger.
- Victron Battery monitor.
- Network cable connection between MFD and a GX device such as a Color Control GX, Venus GX or an Octo GX.
- UTP network cable.

All information on one screen

After connecting the MFD to the GX device, all information can be viewed on one screen:

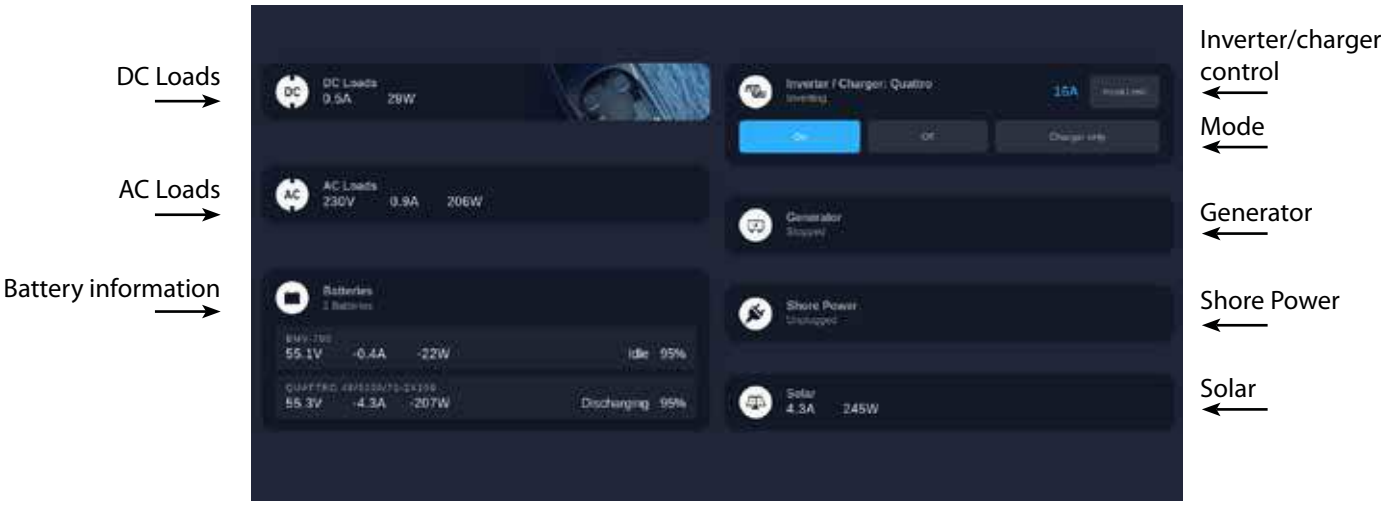

For more information and detailed instructions please see chapter 6 of the CCGX manual:
https://www.victronenergy.com/live/ccgx:start

Accessories

Our systems are comprised of various components. Some of which are specifically designed for specific markets. Other Victron components are applicable for a wide range of applications. You are able to find the specifications and other detailed information about these components in the 'Technical Information' section.

Battery Monitor

Key tasks of the Victron Battery Monitor are measuring charge and discharge currents as well as calculating the state-of-charge and time-to-go of a battery. An alarm is sent when certain limits are exceeded (such as an excessive discharge).

Color Control GX

The Color Control GX provides intuitive control and monitoring for all products connected to it. The list of Victron products that can be connected is endless: Inverters, Multis, Quattros, MPPTs, BMV-series, Skylla-i, Lynx Ion and even more.
The Color Control GX is now also equipped with a generator start/stop function using the internal relay.
Besides monitoring and controlling products on the Color Control GX, the information is also forwarded to our free remote monitoring website: the VRM Online Portal.

Venus GX

The Venus GX is the communication-centre of your installation. Venus allows you to talk to all components in your system and ensure they are working in harmony. Monitoring of live data, and changing settings is performed by using your smartphone (or other device) via our free-to-use Victron Remote Management Portal (VRM).

Digital Multi Control Panel GX

With this panel you are able to remotely monitor and control Multiplus and Quattro systems. A simple turn of the button can limit the power supply of for example a generator and/or shore-side current. The setting range is up to 200A.

VE.Can resistive tank sender adapter

The VE.Can resistive tank sender adapter allows a standard resistive tank level sender to connect to the Color Control GX. It is compatible with both European standard 0-180 Ohm and United States standard 240-30 Ohm tank level senders and is accurate to ±1%. It is easily configurable to resistive senders from fuel, fresh water, waste water, well water, oil and black water (sewage) tanks.

Filax 2: the ultra fast transfer switch

The Filax has been designed to switch sensitive loads, such as computers or modern entertainment equipment from one AC source to another. The priority source typically is the mains, a generator or shore power. The alternate source typically is an inverter.

BatteryProtect
Models 12/24V: 65A, 100A & 220A
Model 48V: 100A

The BatteryProtect disconnects the battery from non-essential loads before it is completely discharged (which would damage the battery) or before it has insufficient power left to crank the engine.

Shore power cable

- Waterproof Shore Power Cable and Inlet IP67
- Moulded Plug and Connector
- Power indication LED
- Protection Cap
- Stainless Steel Inlet

Smart Battery Sense

Smart Battery Sense is a wireless battery voltage and temperature sensor for Victron MPPT Solar Chargers.
With voltage and temperature sense in place, batteries will be better charged; improving charging-efficiency and prolonging battery life.

CANvu GX

The CANvu GX is a device similar to the Color Control GX. The CANvu GX is best for harsh environments - when its IP67 rating and touch LCD is a must.

We have a couple of tools available that make it easy for Victron distributors, installers and customers to work with Victron Energy products. Whether you want to configure and read out your Victron products with VictronConnect using your smartphone, tablet or computer or you want to show your VRM site to friends and family, it is all possible with these Victron tools.

VRM Online Portal: Remotely monitor Victron equipment

Victron Remote Management (VRM) is provided by Victron Energy to remotely monitor electrical equipment all over the world.
Once you have a VRM account you will be able to view live feed from your installation, such as generated solar energy, state of charge of your batteries and the consumption.

To get an impression of the VRM Online Portal, please visit: https://vrm.victronenergy.com and use the 'Take a look inside' button. The portal is free of charge.

VictronConnect

VictronConnect lets you get live status info and configure Victron products with built-in Bluetooth support, such as the SmartSolar and the Blue Smart IP65 Charger, or using a VE.Direct Bluetooth Smart dongle or VE.Direct USB interface.
Firmware updates are included inside VictronConnect.
VictronConnect is available for both Windows PCs, Max OS X, iOS and Android phones as well as tablets.
Download VictronConnect from our software page:
https://www.victronenergy.com/support-and-downloads/software#victronconnect-app

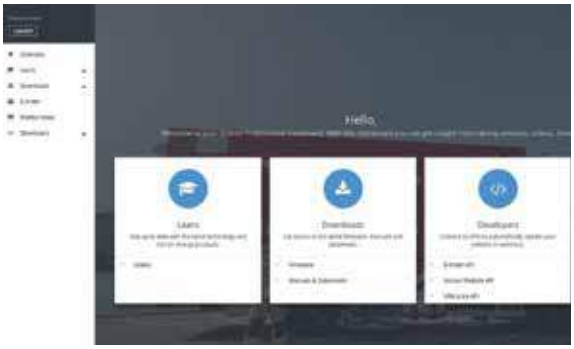

Victron Professional

Victron Professional is a new online portal, available to both distributors as well as other professionals and end users that work with Victron equipment.
With Victron Professional you can get insight into training sessions, videos, firmware files, APIs and the latest news. If you already use E-Order you can login with those credentials.

Sign up for Victron Professional here:
https://professional.victronenergy.com

VRM World: View shared VRM sites around the world

Ever wanted to show your clients, friends, colleagues how much solar energy your installation is generating or indeed any other data that you can see on your VRM site? Well now you can – using VRM World.
You need a VRM account to be able to view shared VRM sites. In your VRM portal it is possible to publicly share on VRM World.

Visit VRM World here:
https://vrm.victronenergy.com/world/

Victron Community

The Victron Community is a place for questions and answers about Victron related subjects.
https://community.victronenergy.com/

Instruction videos on Victron youtube channel

On our YouTube channel you can watch Victron Energy instruction videos.
https://www.youtube.com/user/VictronEnergyBV

Victron Energy Blog

On the Victron Energy Blog you can read about the latest news, new products and a lot of success stories with Victron Energy.

Subscribe to the Victron Energy Blog:
https://www.victronenergy.com/blog/

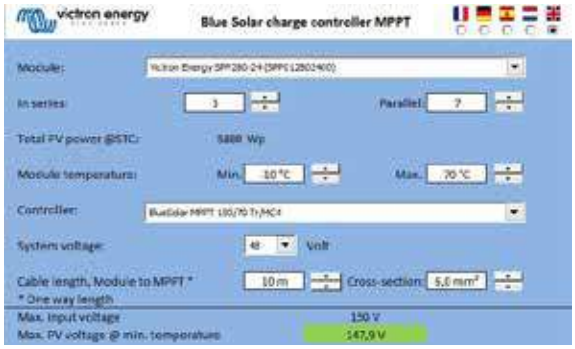

MPPT Calculator Excel sheet

With the MPPT Calculator Excel sheet you can match solar modules to MPPT charge controllers.

Download the Excel sheet from our software page:

Victron Live

Victron Live is a living and growing website, which is a constantly evolving information store. It is a place where you can find manuals for VEConfigure3, Assistants and other software and software products.

Visit Victron Live here:
https://www.victronenergy.com/live/

Note - for our newest datasheets please refer to our website:
www.victronenergy.com

TECHNICAL INFORMATION

Phoenix inverters Smart 1600VA - 3000VA 22
Phoenix inverters 250VA - 1200VA - 230V and 120V VE.Direct 24
Phoenix inverters 1200VA - 5000VA - 230V 26
MultiPlus inverter/charger 500VA - 1600VA 230V 28
MultiPlus inverter/charger 800VA - 5kVA 230V 30
MultiPlus inverter/charger 2kVA and 3kVA 120V 32
Quattro inverter/charger 3kVA - 15kVA 230V 34
Quattro inverter/charger 3kVA - 10kVA 120V 36
Blue Smart IP22 Charger 38
Blue Smart IP67 Charger 39
Blue Smart IP65 Charger with DC connector 41
Phoenix Smart IP43 Charger 44
Phoenix battery charger 12/24V 46
Skylla-IP44 battery charger 48
Skylla-i battery charger 24V 50
Skylla-TG charger 24/48V 230V 52
Skylla charger 24V universal input and GL approval 54
Skylla-TG 24/30 and 24/50 GMDSS 56
Centaur charger 12/24V 58
Isolation transformers 60
Orion-Tr Smart DC-DC charger isolated 62
Orion-Tr DC-DC converters, low power, Non-isolated 64
Orion DC-DC converters, high power, Non-isolated 65
Orion-Tr DC-DC converters, isolated 66
Orion IP67 24/12 DC-DC converter, Non-isolated 68
Buck-Boost DC-DC Converter 69
Color Control GX 70
Venus GX 74
Wall mounted display enclosures 76
Smart BatteryProtect 65A/100A/220A 77
Cyrix-ct 12/24V 120A and 230A 78
Cyrix-i 400A 12/24V and 24/48V 80
Cyrix Li-ion 230A series 82
BMV-700 series: Precision battery monitoring 84
BMV-712 Smart: Bluetooth inside 86
Argo diode battery isolators 88
Argo FET battery isolators 89
Battery Balancer 90
Lithium-Iron-Phosphate Batteries Smart 12,8 & 25,6 Volt: with Bluetooth 92
VE.Bus BMS 94
BMS 12/200 for 12,8V Lithium-Iron-Phosphate Batteries 96
AGM Super Cycle battery 98
Telecom batteries 99
Gel and AGM batteries 100
BlueSolar & SmartSolar MPPT charge controllers - overview 104
BlueSolar monocrystalline panels 106
BlueSolar polycrystalline panels 107
MultiPlus principle 108

Phoenix Inverter Smart 12/2000

Bluetooth built-in: fully configurable with a tablet or smartphone

- Low battery voltage alarm
- Low battery voltage cut-off and restart levels
- Dynamic cut-off: load dependent cut-off level
- Output voltage: 210 - 245V
- Frequency: 50 Hz or 60 Hz
- ECO mode on/off and ECO mode sense level
- Alarm relay

Monitoring:

- In- and output voltage, load and alarms

VE.Direct communication port

The VE.Direct port can be connected to a computer (VE.Direct to USB interface cable needed) to configure and monitor the same parameters.

Proven reliability

The full bridge plus toroidal transformer topology has proven its reliability over many years. The inverters are short circuit proof and protected against overheating, whether due to overload or high ambient temperature.

High start-up power

Needed to start loads such as power converters for LED lamps, halogen lamps or electric tools.

ECO mode

When in ECO mode, the inverter will switch to standby when the load decreases below a preset value. Once in standby the inverter will switch on for a short period every 2,5 seconds (adjustable).
If the load exceeds the preset level, the inverter will remain on.

Remote on/off

A remote on/off switch or relay contact can be connected to a two pole connector. Alternatively, the H terminal (left) of the two pole connector can be switched to battery plus, or the L terminal (right) of the two pole connector can be switched to battery minus (or the chassis of a vehicle, for example).

LED diagnosis

Please see manual for a description.

To transfer the load to another AC source: the automatic transfer switch

For our low power inverters we recommend our Filax Automatic Transfer Switch. The Filax features a very short switchover time (less than 20 milliseconds) so that computers and other electronic equipment will continue to operate without disruption. Alternatively use a MultiPlus with built-in transfer switch.

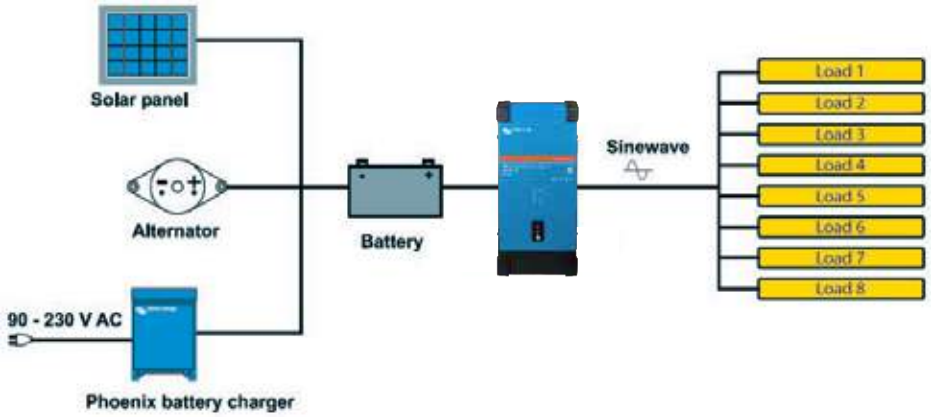

Phoenix Inverter Smart	12/1600 24/1600 48/1600	12/2000 24/2000 48/2000	12/3000 24/3000 48/3000
Parallel and 3-phase operation	No		
INVERTER			
Input voltage range (1)	9,3 – 17V 18,6 – 34V 37,2 – 68V		
Output	Output voltage: 230VAC ±2% 50 Hz or 60Hz ± 0,1% (1)		
Cont. output power at 25ºC (2)	1600VA	2000VA	3000VA
Cont. output power at 25ºC	1300W	1600W	2400W
Cont. output power at 40ºC	1200W	1450W	2200W
Cont. output power at 65ºC	800W	1000W	1700W
Peak power	3000VA	4000VA	6000VA
Dynamic (load dependent) DC low shut down (fully configurable)	Dynamic cut-off, see https://www.victronenergy.com/live/ve.direct:phoenix-inverters-dynamic-cutoff		
Max. efficiency 12/ 24 /48 V	92 / 94 / 94%	92 / 94 / 94%	93 / 94 / 95%
Zero load power 12 / 24 / 48 V	8 / 9 / 11W	8 / 9 / 11W	12 / 13 / 15W
Zero load power in ECO mode	0,6 / 1,3 / 2,1W	0,6 / 1,3 / 2,1W	1,5 / 1,9 / 2,8W
GENERAL			
Programmable relay (2)	Yes		
Stop & start power ECO-mode	adjustable		
Protection (3)	a - g		
Bluetooth wireless communication	For remote monitoring and system integration		
VE.Direct communication port	For remote monitoring and system integration		
Remote on-off	Yes		
Common Characteristics	Operating temperature range: -40 to +65ºC (fan assisted cooling) Humidity (non-condensing): max 95%		
ENCLOSURE			
Common Characteristics	Material & Colour: steel (blue RAL 5012; and black RAL 9017) Protection category: IP21		
Battery-connection	M8 bolts	M8 bolts	2+2 M8 bolts
230 V AC-connection	Screw terminals		
Weight	12kg	13kg	19kg
Dimensions (hxwxd)	485 x 219 x 125mm	485 x 219 x 125mm	533 x 285 x 150mm (12V) 485 x 285 x 150mm (24V/48V)
STANDARDS			
Safety	EN 60335-1		
Emission Immunity	EN 55014-1 / EN 55014-2/ EN-IEC 61000-6-1 / EN-IEC 61000-6-2 / EN-IEC 61000-6-3		
Automotive Directive	ECE R10-5		

1) Non-linear load, crest factor 3:1
2) Programmable relay that can a.o. be set for general alarm, DC under voltage or genset start/stop function.
AC rating: 230 V / 4 A
DC rating: 4 A / 35 VDC, 1A / 60VDC

3) Protection key:
a) output short circuit
b) overload
c) battery voltage too high
d) battery voltage too low
e) temperature too high
f) 230 V AC on inverter output
g) input voltage ripple too high

Phoenix Inverter Control
This panel is intended for remote on/off control of all Phoenix inverters Smart

Color Control GX and other GX devices
Provides monitoring and control.
Locally, and remotely on the VRM Portal.

VE.Direct to USB interface
Connects to a USB port.

Bluetooth wireless communication
Connects to a smart phone (both iOS and Android).

BMV-712 Smart Battery Monitor
The BMV Battery Monitor features an advanced microprocessor control system combined with high resolution measuring systems for battery voltage and charge/discharge current. Besides this, the software includes complex calculation algorithms, like Peukert's formula, to exactly determine the state of charge of the battery. The BMV selectively displays battery voltage, current, consumed Ah or time to go. The monitor also stores a host of data regarding performance and use of the battery.

Phoenix 12/375 VE.Direct

Phoenix 12/375 VE.Direct

VE.Direct communication port

The VE.Direct port can be connected to:

- A computer (VE.Direct to USB interface cable needed)
- Apple and Android smartphones, tablets, MacBook's and other devices (VE.Direct Bluetooth Smart dongle needed)

Fully configurable:

- Low battery voltage alarm trip and reset levels
- Low battery voltage cut-off and restart levels
- Dynamic cut-off: load dependent cut-off level
- Output voltage 210 - 245V
- Frequency 50 Hz or 60 Hz
- ECO mode on/off and ECO mode sense level

Monitoring:

- In- and output voltage, % load and alarms

Proven reliability

The full bridge plus toroidal transformer topology has proven its reliability over many years.
The inverters are short circuit proof and protected against overheating, whether due to overload or high ambient temperature.

High start-up power

Needed to start loads such as power converters for LED lamps, halogen lamps or electric tools.

ECO mode

When in ECO mode, the inverter will switch to standby when the load decreases below a preset value (min load: 15W). Once in standby the inverter will switch on for a short period (adjustable, default: every 2,5 seconds). If the load exceeds a preset level, the inverter will remain on.

Remote on/off

A remote on/off switch can be connected to a two-pole connector, or between battery plus and the left-hand contact of the two-pole connector.

LED diagnosis

Please see manual for a description.

To transfer the load to another AC source: the automatic transfer switch

For our low power inverters, we recommend our Filax Automatic Transfer Switch. The Filax features a very short switchover time (less than 20 milliseconds) so that computers and other electronic equipment will continue to operate without disruption.

Available with different output sockets

Schuko	UK	AU/NZ	IEC-320 (male plug included)	Nema 5-15R
	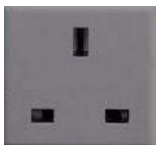			

DC connection with screw terminals

No special tools needed for installation

Phoenix Inverter	12 Volt 24 Volt 48 Volt	12/250 24/250 48/250	12/375 24/375 48/375	12/500 24/500 48/500	12/800 24/800 48/800	12/1200 24/1200 48/1200
Cont. power at 25°C (1)		250VA	375VA	500VA	800VA	1200VA
Cont. power at 25°C / 40°C		200 / 175W	300 / 260W	400 / 350W	650 / 560W	1000 / 850W
Peak power		400W	700W	900W	1500W	2200W
Output AC voltage / frequency (adjustable)		230VAC or 120VAC +/- 3% 50Hz or 60Hz +/- 0,1%				
Input voltage range		9,2 - 17 / 18,4 - 34,0 / 36,8 - 62,0V				
DC low shut down (adjustable)		9,3 / 18,6 / 37,2V				
Dynamic (load dependent) DC low shut down (fully configurable)		Dynamic cut-off, see https://www.victronenergy.com/live/ve.direct:phoenix-inverters-dynamic-cutoff				
DC low restart and alarm (adjustable)		10,9 / 21,8 / 43,6V				
Battery charged detect (adjustable)		14,0 / 28,0 / 56,0V				
Max. efficiency		87 / 88 / 88%	89 / 89 / 90%	90 / 90 / 91%	90 / 90 / 91%	91 / 91 / 92%
Zero-load power		4,2 / 5,2 / 7,9W	5,6 / 6,1 / 8,5W	6 / 6,5 / 9W	6,5 / 7 / 9,5W	7 / 8 / 10W
Default zero-load power in ECO mode (default retry interval: 2,5 s, adjustable)		0,8 / 1,3 / 2,5W	0,9 / 1,4 / 2,6W	1 / 1,5 / 3,0W	1 / 1,5 / 3,0W	1 / 1,5 / 3,0W
ECO mode stop and start power setting		Adjustable				
Protection (2)		a - f				
Operating temperature range		-40 to +65°C (fan assisted cooling) Derate 1,25% per °C above 40°C				
Humidity (non-condensing)		max 95%				
ENCLOSURE						
Material & Colour		Steel chassis and plastic cover (blue Ral 5012)				
Battery-connection		Screw terminals				
Maximum cable cross-section		10mm² / AWG8	10mm² / AWG8	10mm² / AWG8	25 / 10 / 10mm² / AWG4 / 8 / 8	35 / 25 / 25mm² / AWG2 / 4 / 4
Standard AC outlets		230V: Schuko (CEE 7/4), IEC-320 (male plug included) UK (BS 1363), AU/NZ (AS/NZS 3112) 120V: Nema 5-15R				
Protection category		IP 21				
Weight		2,4kg / 5,3lbs	3,0kg / 6,6lbs	3,9kg / 8.5lbs	5,5kg / 12lbs	7,4kg / 16,3lbs
Dimensions (h x w x d, mm) (h x w x d, inch)		86 x 165 x 260 3.4 x 6.5 x 10.2	86 x 165 x 260 3.4 x 6.5 x 10.2	86 x 172 x 275 3,4 x 6,8 x 10,8	105 x 216 x 305 4.1 x 8.5 x 12.1 (12V model: 105 x 230 x 325)	117 x 232 x 327 4.6 x 9.1 x 12.9 (12V model: 117 x 232 x 362)
ACCESSORIES						
Remote on-off		Yes				
Automatic transfer switch		Filax				
STANDARDS						
Safety		EN-IEC 60335-1 / EN-IEC 62109-1				
EMC		EN 55014-1 / EN 55014-2 / IEC 61000-6-1 / IEC 61000-6-2 / IEC 61000-6-3				
Automotive Directive		ECE R10-4				

1) Nonlinear load, crest factor 3:1
2) Protection key:
a) output short circuit
b) overload
c) battery voltage too high
d) battery voltage too low
e) temperature too high
f) DC ripple too high

Battery Alarm
An excessively high or low battery voltage is indicated by an audible and visual alarm, and a relay for remote signalling.

BMV Battery Monitor
The BMV Battery Monitor features an advanced microprocessor control system combined with high resolution measuring systems for battery voltage and charge/discharge current Besides this, the software includes complex calculation algorithms to exactly determine the state of charge of the battery. The BMV selectively displays battery voltage, current, consumed Ah or time to go. The monitor also stores a host of data regarding performance and use of the battery.

VE.Direct Bluetooth Smart dongle
(must be ordered separately)

Phoenix Inverter
24/5000

SinusMax - Superior engineering

Developed for professional duty, the Phoenix range of inverters is suitable for the widest range of applications. The design criteria have been to produce a true sine wave inverter with optimized efficiency but without compromise in performance. Employing hybrid HF technology, the result is a top quality product with compact dimensions, light in weight and capable of supplying power, problem-free, to any load.

Extra start-up power

A unique feature of the SinusMax technology is very high start-up power. Conventional high frequency technology does not offer such extreme performance. Phoenix Inverters, however, are well suited to power up difficult loads such as refrigeration compressors, electric motors and similar appliances.

Virtually unlimited power thanks to parallel and 3-phase operation capability

Up to 6 units inverters can operate in parallel to achieve higher power output. Six 24/5000 units, for example, will provide 24kW / 30kVA output power. Operation in 3-phase configuration is also possible.

To transfer the load to another AC source: the automatic transfer switch

If an automatic transfer switch is required we recommend using the MultiPlus inverter/charger instead. The switch is included in these products and the charger function of the MultiPlus can be disabled. Computers and other electronic equipment will continue to operate without disruption because the MultiPlus features a very short switchover time (less than 20 milliseconds).

Computer interface

All models have a RS-485 port. All you need to connect to your PC is our MK3-USB VE.Bus to USB interface (see under accessories). Together with our VEConfigure software, which can be downloaded free of charge from our website, all parameters of the inverters can be customized. This includes output voltage and frequency, over and under voltage settings and programming the relay. This relay can for example be used to signal several alarm conditions, or to start a generator. The inverters can also be connected to VENet, the new power control network of Victron Energy, or to other computerized monitoring and control systems.

Phoenix Inverter Compact
24/1600

New applications of high power inverters

The possibilities of paralleled high power inverters are truly amazing. For ideas, examples and battery capacity calculations please refer to our book 'Energy Unlimited' (available free of charge from Victron Energy and downloadable from www.victronenergy.com).

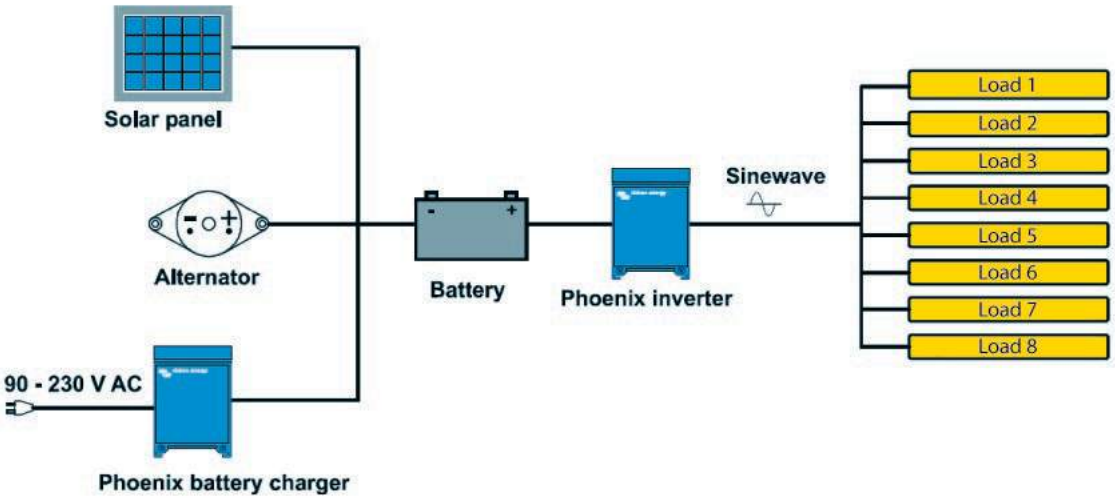

Phoenix Inverter	C12/1200 C24/1200	C12/1600 C24/1600	C12/2000 C24/2000	12/3000 24/3000 48/3000	24/5000 48/5000
Parallel and 3-phase operation	Yes				
INVERTER					
Input voltage range (V DC)	9,5 – 17V 19 – 33V 38 – 66V				
Output	Output voltage: 230 VAC ± 2% Frequency: 50 Hz ± 0,1% (1)				
Cont. output power at 25°C (VA) (2)	1200	1600	2000	3000	5000
Cont. output power at 25°C (W)	1000	1300	1600	2400	4000
Cont. output power at 40°C (W)	900	1200	1450	2200	3700
Cont. output power at 65°C (W)	600	800	1000	1700	3000
Peak power (W)	2400	3000	4000	6000	10000
Max. efficiency 12/ 24 / 48V (%)	92 / 94 / 94	92 / 94 / 94	92 / 92	93 / 94 / 95	94 / 95
Zero load power 12 / 24 / 48V (W)	8 / 10 / 12	8 / 10 / 12	9 / 11	20 / 20 / 25	30 / 35
Zero load power in AES mode (W)	5 / 8 / 10	5 / 8 / 10	7 / 9	15 / 15 / 20	25 / 30
Zero load power in Search mode (W)	2 / 3 / 4	2 / 3 / 4	3 / 4	8 / 10 / 12	10 / 15
GENERAL					
Programmable relay (3)	Yes				
Protection (4)	a - g				
VE.Bus communication port	For parallel and three phase operation, remote monitoring and system integration				
Remote on-off	Yes				
Common Characteristics	Operating temperature range: -40 to +65°C (fan assisted cooling) Humidity (non-condensing): max 95%				
ENCLOSURE					
Common Characteristics	Material & Colour: aluminium (blue RAL 5012) Protection category: IP21				
Battery-connection	battery cables of 1.5 meter included		M8 bolts	2+2 M8 bolts	
230 V AC-connection	G-ST18i plug		Spring-clamp	Screw terminals	
Weight (kg)	10		12	18	30
Dimensions (hxwhd in mm)	375 x 214 x 110		520 x 255 x 125	362 x 258 x 218	444 x 328 x 240
STANDARDS					
Safety	EN 60335-1				
Emission Immunity	EN 55014-1 / EN 55014-2				

1) Can be adjusted to 60 Hz and to 240 V
2) Non-linear load, crest factor 3:1
3) Programmable relay that can a.o. be set for general alarm, DC under voltage or genset start/stop function.
AC rating: 230 V / 4 A
DC rating: 4 A up to 35 VDC, 1A up to 60VDC

4) Protection key:
a) output short circuit
b) overload
c) battery voltage too high
d) battery voltage too low
e) temperature too high
f) 230 V AC on inverter output
g) input voltage ripple too high

Phoenix Inverter Control

This panel can also be used on a MultiPlus Inverter/Charger when an automatic transfer switch but no charger function is desired.
The brightness of the LEDs is automatically reduced during night time.

Computer controlled operation and monitoring

Several interfaces are available:

Color Control GX

Provides monitor and control. Locally, and also remotely on the VRM Portal.

MK3-USB VE.Bus to USB interface

Connects to a USB port (see 'A guide to VEConfigure')

VE.Bus to NMEA 2000 interface

Connects the device to a NMEA 2000 marine electronics network. See the NMEA 2000 & MFD integration guide

BMV-700 Battery Monitor

The BMV-700 Battery Monitor features an advanced microprocessor control system combined with high resolution measuring systems for battery voltage and charge/discharge current. Besides this, the software includes complex calculation algorithms, like Peukert's formula, to exactly determine the state of charge of the battery. The BMV-700 selectively displays battery voltage, current, consumed Ah or time to go. The monitor also stores a host of data regarding performance and use of the battery.

Several models available (see battery monitor documentation).

MultiPlus inverter/charger 500VA - 1600VA 230V

Proven reliability
The full bridge plus toroidal transformer topology has proven its reliability over many years.
The inverter is short circuit proof and protected against overheating, whether due to overload or high ambient temperature.

PowerControl - Dealing with limited generator, shore side or grid power
With the Multi Control Panel a maximum generator or shore current can be set. The MultiPlus will then take account of other AC loads and use whatever is extra for charging, thus preventing the generator or shore supply from being overloaded.

PowerAssist - Boosting the capacity of shore or generator power
Where peak power is so often required only for a limited period, the MultiPlus will make sure that insufficient shore or generator power is immediately compensated for by power from the battery. When the load reduces, the spare power is used to recharge the battery.

High start-up power
Needed to start high inrush loads such as power converters for LED lamps, halogen lamps or electric tools.

Search Mode
When Search Mode is 'on', the power consumption of the inverter in no-load operation is decreased by approx. 70%. In this mode the Multi, when operating in inverter mode, is switched off in case of no load or very low load, and switches on every two seconds for a short period. If the output current exceeds a set level, the inverter will continue to operate. If not, the inverter will shut down again.

Programmable relay
By default, the programmable relay is set as an alarm relay, i.e. the relay will de-energise in the event of an alarm or a pre-alarm (inverter almost too hot, ripple on the input almost too high, battery voltage almost too low).

12 Volt 24 Volt 48 Volt	12/500/20 24/500/10 48/500/6	12/800/35 24/800/16 48/800/9	12/1200/50 24/1200/25 48/1200/13	12/1600/70 24/1600/40 48/1600/20
PowerControl / PowerAssist	Yes / No	Yes / Yes		
Three Phase and parallel operation	Yes			
Transfer switch	16A			
INVERTER				
Input voltage range	9,5 – 17V	19 – 33V	38– 66V	
Output	Output voltage: 230VAC ± 2%	Frequency: 50Hz ± 0,1% (1)		
Cont. output power at 25°C (3)	500VA	800VA	1200VA	1600VA
Cont. output power at 25°C	430W	700W	1000W	1300W
Cont. output power at 40°C	400W	650W	900W	1100W
Cont. output power at 65°C	300W	400W	600W	800W
Peak power	900W	1600W	2400W	2800W
Maximum efficiency	90 / 91 / 92%	92 / 93 / 94%	93 / 94 / 95%	93 / 94 / 95%
Zero-load power	6 / 6 / 7W	7 / 7 / 8W	10 / 9 / 10W	10 / 9 / 10W
Zero-load power in search mode	2 / 2 / 3W	2 / 2 / 3W	3 / 3 /3W	3 / 3 /3W
CHARGER				
AC Input	Input voltage range: 187-265 VAC	Input frequency: 45 – 65 Hz		
Charge voltage 'absorption'	14,4 / 28,8 / 57,6V			
Charge voltage 'float'	13,8 / 27,6 / 55,2V			
Storage mode	13,2 / 26,4 /52,8V			
Charge current house battery (4)	20 / 10 / 6A	35 / 16 / 9A	50 / 25 / 13A	70 / 40 / 20A
Charge current starter battery	1A (12V and 24V models only)			
Battery temperature sensor	Yes			
GENERAL				
Programmable relay (5)	Yes			
Protection (2)	a – g			
VE.Bus communication port	For parallel and three phase operation, remote monitoring and system integration (RJ45-spliter ASS030065510 needed for 500/800/1200VA models)			
Remote on-off	On/off/charger only			On/off
DIP switches	Yes (6)			Yes (7)
Internal DC fuse	125/60/30A	150/80/40A	200/100/50A	200/125/60A
Common Characteristics	Operating temp. range: -40 to +65°C (fan assisted cooling) Humidity (non-condensing): max 95%			
ENCLOSURE				
Common Characteristics	Material & Colour: Steel/ABS (blue RAL 5012)	Protection category: IP 21		
Battery-connection	16 / 10 / 10 mm²	25 / 16 / 10 mm²	35 / 25 / 10 mm²	50 / 35 / 16 mm²
230V AC-connection	G-ST18i connector			
Weight	4,4 kg	6,4 kg	8,2 kg	10,2 kg
Dimensions (h x w x d)	311 x 182 x 100 mm	360 x 240 x 100 mm	406 x 250 x 100 mm	470 x 265 x 120 mm
STANDARDS				
Safety	EN-IEC 60335-1, EN-IEC 60335-2-29, EN 62109-1			
Emission / Immunity	EN 55014-1, EN 55014-2, EN-IEC 61000-3-2, EN-IEC 61000-3-3 IEC 61000-6-1, IEC 61000-6-2, IEC 61000-6-3			
Road vehicles	ECE R10-5			

1) Can be adjusted to 60Hz and to 240V
2) Protection
a. Output short circuit
b. Overload
c. Battery voltage too high
d. Battery voltage too low
e. Temperature too high
f. 230VAC on inverter output
g. Input voltage ripple too high

3) Non-linear load, crest factor 3:1
4) At 25°C ambient
5) Programmable relay which can be set for:
general alarm, DC under voltage or generator start/stop signal function
AC rating: 230V/4A
DC rating: 4A up to 35VDC, 1A up to 60VDC
6) Remote / Battery charge voltage / Inverter frequency / search mode
7) Battery charge voltage / search mode

MultiPlus
24/3000/70

MultiPlus Compact
12/2000/80

Two AC Outputs
The main output has no break functionality. The MultiPlus takes over the supply to the connected loads in the event of a grid failure or when shore/generator power is disconnected. This happens so fast (less than 20 milliseconds) that computers and other electronic equipment will continue to operate without disruption. The second output is live only when AC is available on the input of the MultiPlus. Loads that should not discharge the battery, like a water heater for example can be connected to this output (second output available on models rated at 3 kVA and more).

Virtually unlimited power thanks to parallel operation
Up to 6 Multis can operate in parallel to achieve higher power output. Six 24/5000/120 units, for example, will provide 25 kW / 30 kVA output power with 720 Amps charging capacity.

Three phase capability
In addition to parallel connection, three units of the same model can be configured for three phase output. But that's not all: up to 6 sets of three units can be parallel connected for a huge 75 kW / 90 kVA inverter and more than 2000 Amps charging capacity.

PowerControl - Dealing with limited generator, shore side or grid power
The MultiPlus is a very powerful battery charger. It will therefore draw a lot of current from the generator or shore side supply (nearly 10 A per 5 kVA Multi at 230 VAC). With the Multi Control Panel a maximum generator or shore current can be set. The MultiPlus will then take account of other AC loads and use whatever is extra for charging, thus preventing the generator or shore supply from being overloaded.

PowerAssist - Boosting the capacity of shore or generator power
This feature takes the principle of PowerControl to a further dimension. It allows the MultiPlus to supplement the capacity of the alternative source. Where peak power is so often required only for a limited period, the MultiPlus will make sure that insufficient shore or generator power is immediately compensated for by power from the battery. When the load reduces, the spare power is used to recharge the battery.

Solar energy: AC power available even during a grid failure
The MultiPlus can be used in off grid as well as grid connected PV and other alternative energy systems.
Loss of mains detection software is available.

System configuring
- In case of a stand-alone application, if settings have to be changed, this can be done in a matter of minutes with a DIP switch setting procedure.
- Parallel and three phase applications can be configured with VE.Bus Quick Configure and VE.Bus System Configurator software.
- Off grid, grid interactive and self-consumption applications, involving grid-tie inverters and/or MPPT Solar Chargers can be configured with Assistants (dedicated software for specific applications).

On-site Monitoring and control
Several options are available: Battery Monitor, Multi Control Panel, Color Control GX or other GX devices, smartphone or tablet (Bluetooth Smart), laptop or computer (USB or RS232).

Remote Monitoring and control
Color Control GX or other GX devices.
Data can be stored and displayed on our VRM (Victron Remote Management) website, free of charge.

Remote configuring
When connected to the Ethernet, systems with a Color Control GX or other GX device can be accessed and settings can be changed remotely.

Color Control GX, showing a
PV application

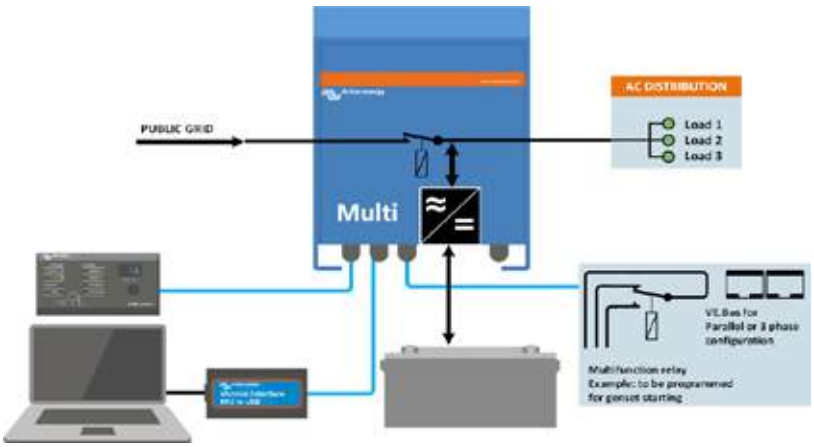

MultiPlus 12 Volt 24 Volt 48 Volt	C 12/800/35 C 24/ 800/16	C 12/1200/50 C 24/1200/25	C 12/1600/70 C 24/1600/40	C 12/2000/80 C 24/2000/50	12/3000/120 24/3000/70 48/3000/35	24/5000/120 48/5000/70
PowerControl	Yes	Yes	Yes	Yes	Yes	Yes
PowerAssist	Yes	Yes	Yes	Yes	Yes	Yes
Transfer switch (A)	16	16	16	30	16 or 50	100
INVERTER						
Input voltage range (V DC)	9,5 – 17 V 19 – 33 V 38 – 66 V					
Output	Output voltage: 230 VAC ± 2% Frequency: 50 Hz ± 0,1% (1)					
Cont. output power at 25°C (VA) (3)	800	1200	1600	2000	3000	5000
Cont. output power at 25°C (W)	700	1000	1300	1600	2400	4000
Cont. output power at 40°C (W)	650	900	1200	1400	2200	3700
Cont. output power at 65°C (W)	400	600	800	1000	1700	3000
Peak power (W)	1600	2400	3000	4000	6000	10.000
Maximum efficiency (%)	92 / 94	93 / 94	93 / 94	93 / 94	93 / 94 / 95	94 / 95
Zero load power (W)	8 / 10	8 / 10	8 / 10	9 / 11	20 / 20 / 25	30 / 35
Zero load power in AES mode (W)	5 / 8	5 / 8	5 / 8	7 / 9	15 / 15 / 20	25 / 30
Zero load power in Search mode (W)	2 / 3	2 / 3	2 / 3	3 / 4	8 / 10 / 12	10 / 15
CHARGER						
AC Input	Input voltage range: 187-265 VAC Input frequency: 45 – 65 Hz Power factor: 1					
Charge voltage 'absorption' (V DC)	14,4 / 28,8 / 57,6					
Charge voltage 'float' (V DC)	13,8 / 27,6 / 55,2					
Storage mode (V DC)	13,2 / 26,4 / 52,8					
Charge current house battery (A) (4)	35 / 16	50 / 25	70 / 40	80 / 50	120 / 70 / 35	120 / 70
Charge current starter battery (A)	4 (12 V and 24 V models only)					
Battery temperature sensor	yes					
GENERAL						
Auxiliary output (5)	n. a.	n. a.	n. a.	n. a.	Yes (16A)	Yes (50A)
Programmable relay (6)	Yes					
Protection (2)	a - g					
VE.Bus communication port	For parallel and three phase operation, remote monitoring and system integration					
General purpose com. port	n. a.	n. a.	n. a.	n. a.	Yes	Yes
Remote on-off	Yes					
Common Characteristics	Operating temp. range: -40 to +65°C (fan assisted cooling) Humidity (non-condensing): max 95%					
ENCLOSURE						
Common Characteristics	Material & Colour: aluminium (blue RAL 5012) Protection category: IP 21					
Battery-connection	battery cables of 1.5 meter			M8 bolts	Four M8 bolts (2 plus and 2 minus connections)	
230 V AC-connection	G-ST18i connector			Spring-clamp	Screw terminals 13 mm² (6 AWG)	M6 bolts
Weight (kg)	10	10	10	12	18	30
Dimensions (hxwxd in mm)	375x214x110			520x255x125	362x258x218	444x328x240
STANDARDS						
Safety	EN-IEC 60335-1, EN-IEC 60335-2-29, IEC 62109-1					
Emission, Immunity	EN 55014-1, EN 55014-2, EN-IEC 61000-3-2, EN-IEC 61000-3-3, IEC 61000-6-1, IEC 61000-6-2, IEC 61000-6-3					
Road vehicles	12V and 24V models: ECE R10-4					
Anti-islanding	See our website					

1) Can be adjusted to 60 HZ; 120 V 60 Hz on request
2) Protection key:
a) output short circuit
b) overload
c) battery voltage too high
d) battery voltage too low
e) temperature too high
f) 230 VAC on inverter output
g) input voltage ripple too high
3) Non-linear load, crest factor 3:1
4) At 25°C ambient
5) Switches off when no external AC source available
6) Programmable relay that can a.o. be set for general alarm,
DC under voltage or genset start/stop function
AC rating: 230 V/4A
DC rating: 4 A up to 35 VDC, 1 A up to 60 VDC

Digital Multi Control Panel
A convenient and low cost solution for remote monitoring, with a rotary knob to set PowerControl and PowerAssist levels.

VE.Bus Smart Dongle
Measures battery voltage and temperature and allows monitoring and control of Multis and Quattros with a smartphone or other
Bluetooth enabled device.

Computer controlled operation and monitoring
Several interfaces are available:

Color Control GX or other GX device
Provides monitor and control. Locally, and also remotely on the VRM Portal.

MK3-USB VE.Bus to USB interface
Connects to a USB port (see 'A guide to VEConfigure')

VE.Bus to NMEA 2000 interface
Connects the device to a NMEA2000 marine electronics network. See the NMEA2000 & MFD integration guide

BMV-712 Smart Battery Monitor
Use a smartphone or other Bluetooth enabled device to:
- customize settings,
- monitor all important data on single screen,
- view historical data, and to
- update the software when new features become available.

MultiPlus
24/3000/70

MultiPlus Compact
12/2000/80

Multifunctional, with intelligent power management
The MultiPlus is a powerful true sine wave inverter, a sophisticated battery charger that features adaptive charge technology, and a high-speed AC transfer switch in a single compact enclosure. Next to these primary functions, the MultiPlus has several advanced features, as outlined below.

Two AC Outputs
The main output has no-break functionality. The MultiPlus takes over the supply to the connected loads in the event of a grid failure or when shore-/generator power is disconnected. This happens so fast (less than 20 milliseconds) that computers and other electronic equipment will continue to operate without disruption.
The second output is live only when AC is available on the input of the MultiPlus. Loads that should not discharge the battery, like a water heater for example, can be connected to this output (second output available on models rated at 3kVA and more).

Virtually unlimited power thanks to parallel operation
Up to six Multis can operate in parallel to achieve higher power output. Six 24/3000/70 units, for example, provide 15kW / 18kVA output power with 420 Amps of charging capacity.

Three phase capability
In addition to parallel connection, three units can be configured for three-phase output. But that's not all: with three strings of six parallel units a 45 kW / 54 kVA three phase inverter and 1260 A charger can be built.

Split phase options
Two units can be stacked to provide 120-0-120 V, and additional units can be paralleled up to a total of 6 units per phase, to supply up to 30 kW / 36 kVA of split phase power.
Alternatively, a split phase AC source can be obtained by connecting our autotransformer (see data sheet on www.victronenergy.com) to a 'European' inverter programmed to supply 240 V / 60 Hz.

PowerControl - Dealing with limited generator, shore side or grid power
The MultiPlus is a very powerful battery charger. It will therefore draw a lot of current from the generator or shore side supply (nearly 20 A per 3 kVA MultiPlus at 120 VAC). With the Multi Control Panel a maximum generator or shore current can be set. The MultiPlus will then take account of other AC loads and use whatever is extra for charging, thus preventing the generator or shore supply from being overloaded.

PowerAssist - Boosting the capacity of shore or generator power
This feature takes the principle of PowerControl to a further dimension. It allows the MultiPlus to supplement the capacity of the alternative source. Where peak power is so often required only for a limited period, the MultiPlus will make sure that insufficient shore or generator power is immediately compensated for by power from the battery. When the load reduces, the spare power is used to recharge the battery.

Four stage adaptive charger and dual bank battery charging
The main output provides a powerful charge to the battery system by means of advanced 'adaptive charge' software. The software fine-tunes the three stage automatic process to suit the condition of the battery, and adds a fourth stage for long periods of float charging. The adaptive charge process is described in more detail on the Phoenix Charger datasheet and on our website, under Technical Information. In addition to this, the MultiPlus will charge a second battery using an independent trickle charge output intended for a main engine or generator starter battery.

System configuring has never been easier
After installation, the MultiPlus is ready to go.
If settings have to be changed, this can be done in a matter of minutes with a DIP switch setting procedure. Even parallel and 3-phase operation can be programmed with DIP switches: no computer needed!
Alternatively, VI .Net can be used instead of the DIP switches.
And sophisticated software (VI .Bus Quick Configure and VI .Bus System Configurator) is available to configure several new, advanced, features.

PowerAssist with 2x MultiPlus in parallel

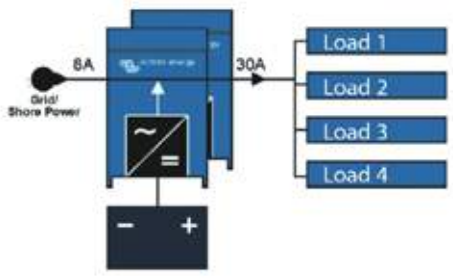

Five parallel units: output power 12,5 kW

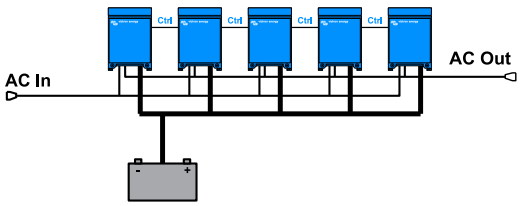

MultiPlus	12 Volt 24 Volt	12/2000/80 24/2000/50	12/3000/120 24/3000/70
PowerControl		Yes	
PowerAssist		Yes	
Transfer switch (A)		50	
Parallel and 3-phase operation		Yes	
INVERTER			
Input voltage range (VDC)		9,5 – 17 V 19 – 33 V	
Output		Output voltage: 120 VAC +/- 2% Frequency: 60 Hz +/- 0,1% (1)	
Continuous power at 25°C / 77°F (VA) (3)		2000	3000
Continuous power at 25°C / 77°F (W)		1600	2400
Continuous power at 40°C / 104°F (W)		1450	2200
Continuous power at 65°C / 150°F (W)		1100	1700
Peak power (W)		4000	6000
Maximum efficiency (%)		92 / 94	93 / 94
Zero load power (W)		9 / 11	20 / 20
Zero load power in AES mode (W)		7 / 8	15 / 15
Zero load power in Search mode (W)		3 / 4	8 / 10
CHARGER			
AC Input		Input voltage range: 95-140 VAC Input frequency: 45 – 65 Hz Power factor: 1	
Charge voltage absorption (VDC)		14,4 / 28,8	
Charge voltage float (VDC)		13,8 / 27,6	
Storage mode (VDC)		13,2 / 26,4	
Charge current house battery (A) (4)		80 / 50	120 / 70
Charge current starter battery (A)		4	
Battery temperature sensor		yes	
GENERAL			
Auxiliary output (5)		n. a.	Yes (32A)
Programmable relay (6)		Yes (1x)	Yes (3x)
Protection (2)		a - g	
VE.Bus communication port		for parallel and three phase operation, remote monitoring and system integration	
General purpose com. port (7)		n. a.	Yes (2x)
Remote on-off		Yes	
Common Characteristics		Operating temp. range: -40 - +65°C / -40 to 150°F (fan assisted cooling) Humidity (non-condensing): max 95%	
ENCLOSURE			
Common Characteristics		Material & Color: aluminium (blue RAL 5012) Protection category: IP 21	
Battery-connection		M8 bolts	M8 bolts (2 plus and 2 minus connections)
120 V AC-connection		Screw-terminal 6 AWG (13 mm²)	Screw-terminal 6 AWG (13mm²)
Weight		13 kg 25 lbs.	19kg 40 lbs.
Dimensions (hxwxd in mm and inches)		520x255x125 mm 20.5x10.0x5.0 inch	362x258x218 mm 14.3x10.2x8.6 inch
STANDARDS			
Safety		EN-IEC 60335-1, EN-IEC 60335-2-29	UL 1741, UL 458, EN-IEC 60335-1, EN-IEC 60335-2-29
Emission and Immunity		EN-IEC 61000-3-2/3-3/, EN-IEC 61000-6-1/6-2/6-3	EN-IEC 61000-3-2/3-3/, EN-IEC 61000-6-1/6-2/6-3

1) Can be adjusted to 60 Hz / 120 V 60 Hz on request
2) Protection key:
a) output short circuit
b) overload
c) battery voltage too high
d) battery voltage too low
e) temperature too high
f) 230 VAC on inverter output
g) input voltage ripple too high
3) Non-linear load, crest factor 3:1
4) At 75°F ambient
5) Switches off when no external AC source available
6) Programmable relay that can also be set for general alarm,
DC under voltage or gen set start/stop function
AC rating: 230 V/4 A
DC rating: 4 A up to 35 VDC, 1 A up to 60 VDC
7) Aux. to communicate with a lithium ion battery BMS

Digital Multi Control

A convenient and low cost solution for remote monitoring, with a rotary knob to set PowerControl and PowerAssist levels.

VE.Bus Smart Dongle

Measures battery voltage and temperature and allows monitoring and control of Multi's and Quattros with a smartphone or other Bluetooth enabled device.

Computer controlled operation and monitoring

Several interfaces are available:

Color Control GX and other GX devices

Provides monitor and control. Locally, and also remotely on the VRM Portal.

MK3-USB VE.Bus to USB interface

Connects to a USB port (see 'A guide to VEConfigure')

VE.Bus to NMEA 2000 interface

Connects the device to a NMEA2000 marine electronics network. See the NMEA2000 & MFD integration guide

BMV-712 Smart Battery Monitor

Use a smartphone or other Bluetooth enabled device to:
- customize settings,
- monitor all important data on single screen,
- view historical data, and to
- update the software when new features become available.

Quattro
48/5000/70-100/100

Quattro
48/15000/200-100/100

Two AC inputs with integrated transfer switch
The Quattro can be connected to two independent AC sources, for example the public grid and a generator, or two generators. The Quattro will automatically connect to the active source.

Two AC Outputs
The main output has no-break functionality. The Quattro takes over the supply to the connected loads in the event of a grid failure or when shore/generator power is disconnected. This happens so fast (less than 20 milliseconds) that computers and other electronic equipment will continue to operate without disruption.
The second output is live only when AC is available on one of the inputs of the Quattro. Loads that should not discharge the battery, like a water heater for example, can be connected to this output.

Virtually unlimited power thanks to parallel operation
Up to 6 Quattro units can operate in parallel. Six units 48/10000/140, for example, will provide 48kW / 60kVA output power and 840 Amps charging capacity.

Split phase options
Two units can be stacked to provide 120-0-120V, and additional units can be paralleled up to a total of 6 units per phase, to supply up to 30kW / 36kVA of split phase power.
Alternatively, a split phase AC source can be obtained by connecting our autotransformer (see data sheet on www.victronenergy.com) to a 'European' inverter programmed to supply 240V / 60Hz.

Three phase capability
Three units can be configured for three phase output. But that's not all: up to 6 sets of three units can be parallel connected to provide 144kW / 180kVA inverter power and more than 2500A charging capacity.

PowerControl – Dealing with limited generator, shore side or grid power
The Quattro is a very powerful battery charger. It will therefore draw a lot of current from the generator or shore side supply (16A per 5kVA Quattro at 230VAC). A current limit can be set on each AC input. The Quattro will then take account of other AC loads and use whatever is spare for charging, thus preventing the generator or mains supply from being overloaded.

PowerAssist – Boosting shore or generator power
This feature takes the principle of PowerControl to a further dimension allowing the Quattro to supplement the capacity of the alternative source. Where peak power is so often required only for a limited period, the Quattro will make sure that insufficient mains or generator power is immediately compensated for by power from the battery. When the load reduces, the spare power is used to recharge the battery.

Solar energy: AC power available even during a grid failure
The Quattro can be used in off grid as well as grid connected PV and other alternative energy systems.
Loss of mains detection software is available.

System configuring
- In case of a stand-alone application, if settings have to be changed, this can be done in a matter of minutes with a DIP switch setting procedure.
- Parallel and three phase applications can be configured with VE.Bus Quick Configure and VE.Bus System Configurator software.
- Off grid, grid interactive and self-consumption applications, involving grid-tie inverters and/or MPPT Solar Chargers can be configured with Assistants (dedicated software for specific applications).

On-site Monitoring and control
Several options are available: Battery Monitor, Multi Control Panel, Color Control GX or other GX devices, smartphone or tablet (Bluetooth Smart), laptop or computer (USB or RS232).

Remote Monitoring and control
Color Control GX or other GX devices.
Data can be stored and displayed on our VRM (Victron Remote Management) website, free of charge.

Remote configuring
When connected to the Ethernet, systems with a Color Control GX or other GX device can be accessed and settings can be changed remotely.

Color Control GX, showing a PV application

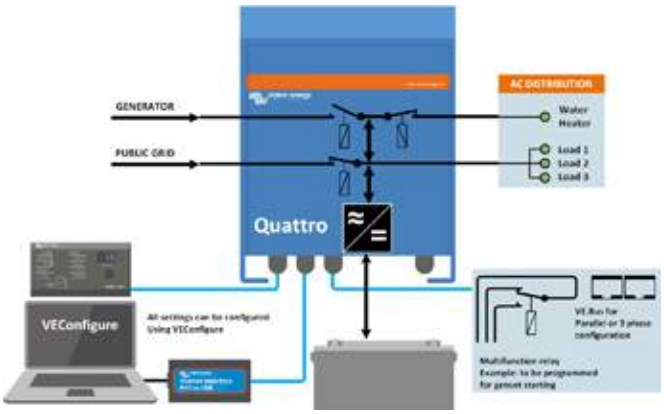

Quattro	12/3000/120-50/50 24/3000/70-50/50	12/5000/220-100/100 24/5000/120-100/100 48/5000/70-100/100	24/8000/200-100/100 48/8000/110-100/100	48/10000/140-100/100	48/15000/200-100/100
PowerControl / PowerAssist	Yes				
Integrated Transfer switch	Yes				
AC inputs (2x)	Input voltage range: 187-265 VAC Input frequency: 45 – 65 Hz Power factor: 1				
Maximum feed through current (A)	2x 50	2x100	2x100	2x100	2x100
INVERTER					
Input voltage range (V DC)	9,5 – 17V 19 – 33V 38 – 66V				
Output (1)	Output voltage: 230 VAC ± 2% Frequency: 50 Hz ± 0,1%				
Cont. output power at 25°C (VA) (3)	3000	5000	8000	10000	15000
Cont. output power at 25°C (W)	2400	4000	6500	8000	12000
Cont. output power at 40°C (W)	2200	3700	5500	6500	10000
Cont. output power at 65°C (W)	1700	3000	3600	4500	7000
Peak power (W)	6000	10000	16000	20000	25000
Maximum efficiency (%)	93 / 94	94 / 94 / 95	94 / 96	96	96
Zero load power (W)	20 / 20	30 / 30 / 35	60 / 60	60	110
Zero load power in AES mode (W)	15 / 15	20 / 25 / 30	40 / 40	40	75
Zero load power in Search mode (W)	8 / 10	10 / 10 / 15	15 / 15	15	20
CHARGER					
Charge voltage 'absorption' (V DC)	14,4 / 28,8	14,4 / 28,8 / 57,6	28,8 / 57,6	57,6	57,6
Charge voltage 'float' (V DC)	13,8 / 27,6	13,8 / 27,6 / 55,2	27,6 / 55,2	55,2	55,2
Storage mode (V DC)	13,2 / 26,4	13,2 / 26,4 / 52,8	26,4 / 52,8	52,8	52,8
Charge current house battery (A) (4)	120 / 70	220 / 120 / 70	200 / 110	140	200
Charge current starter battery (A)	4 (12V and 24V models only)				
Battery temperature sensor	Yes				
GENERAL					
Auxiliary output (A) (5)	25	50	50	50	50
Programmable relay (6)	3x	3x	3x	3x	3x
Protection (2)	a-g				
VE.Bus communication port	For parallel and three phase operation, remote monitoring and system integration				
General purpose com. port	2x	2x	2x	2x	2x
Remote on-off	Yes				
Common Characteristics	Operating temp.: -40 to +65°C Humidity (non-condensing): max. 95%				
ENCLOSURE					
Common Characteristics	Material & Colour: aluminium (blue RAL 5012) Protection category: IP 21				
Battery-connection	Four M8 bolts (2 plus and 2 minus connections)				
230 V AC-connection	Screw terminals 13 mm² (6 AWG)	Bolts M6	Bolts M6	Bolts M6	Bolts M6
Weight (kg)	19	34 / 30 / 30	45 / 41	51	72
Dimensions (hxwxd in mm)	362 x 258 x 218	470 x 350 x 280 444 x 328 x 240 444 x 328 x 240	470 x 350 x 280	470 x 350 x 280	572 x 488 x 344
STANDARDS					
Safety	EN-IEC 60335-1, EN-IEC 60335-2-29, EN-IEC 62109-1				
Emission, Immunity	EN 55014-1, EN 55014-2, EN-IEC 61000-3-2, EN-IEC 61000-3-3, IEC 61000-6-1, IEC 61000-6-2, IEC 61000-6-3				
Road vehicles	12V and 24V models: ECE R10-4				
Anti-islanding	See our website				

1) Can be adjusted to 60 HZ. 120 V models available on request
2) Protection key:
   a) output short circuit
   b) overload
   c) battery voltage too high
   d) battery voltage too low
   e) temperature too high
   f) 230 VAC on inverter output
   g) input voltage ripple too high
3) Non-linear load, crest factor 3:1
4) At 25°C ambient
5) Switches off when no external AC source available
6) Programmable relay that can a.o. be set for general alarm,
   DC under voltage or genset start/stop function
   AC rating: 230 V / 4 A
   DC rating: 4 A up to 35 VDC, 1 A up to 60 VDC

Digital Multi Control Panel

A convenient and low cost solution for remote monitoring, with a rotary knob to set PowerControl and PowerAssist levels.

VE.Bus Smart Dongle

Measures battery voltage and temperature and allows monitoring and control of Multis and Quattros with a smartphone or other

Bluetooth enabled device.

Computer controlled operation and monitoring

Several interfaces are available:

Color Control GX and other GX devices

Monitoring and control. Locally, and also remotely on the VRM Portal.

MK3-USB (VE.Bus to USB interface)

Connects to a USB port (see 'A guide to VEConfigure')

VE.Bus to NMEA 2000 interface

Connects the device to a NMEA2000 marine electronics network. See the NMEA2000 & MFD integration guide

BMV-712 Smart Battery Monitor

Use a smartphone or other Bluetooth enabled device to:

- customize settings,
- monitor all important data on single screen,
- view historical data, and to
- update the software when new features become available.

Quattro
48/5000/70-100/100

Two AC inputs with integrated transfer switch
The Quattro can be connected to two independent AC sources, for example the public grid and a generator, or two generators. The Quattro will automatically connect to the active source.

Two AC Outputs
The main output has no-break functionality. The Quattro takes over the supply to the connected loads in the event of a grid failure or when shore/generator power is disconnected. This happens so fast (less than 20 milliseconds) that computers and other electronic equipment will continue to operate without disruption.
The second output is live only when AC is available on one of the inputs of the Quattro. Loads that should not discharge the battery, like a water heater for example, can be connected to this output.

Virtually unlimited power thanks to parallel operation
Up to 6 Quattro units can operate in parallel. Six units 48/10000/140, for example, will provide 48kW / 60kVA output power and 840 Amps charging capacity.

Split phase and three phase capability
Two units can be configured for split phase, and three units can be configured for three phase output. But that's not all: up to 6 sets of three units can be parallel connected to provide 144kW / 180kVA inverter power and more than 2500A charging capacity. For more detail please enter *parallel* in the search box on our website.

PowerControl – Dealing with limited generator, shore side or grid power
The Quattro is a very powerful battery charger. It will therefore draw a lot of current from the generator or shore side supply (16A per 5kVA Quattro at 230VAC). A current limit can be set on each AC input. The Quattro will then take account of other AC loads and use whatever is spare for charging, thus preventing the generator or mains supply from being overloaded.

PowerAssist – Boosting shore or generator power
This feature takes the principle of PowerControl to a further dimension allowing the Quattro to supplement the capacity of the alternative source. Where peak power is so often required only for a limited period, the Quattro will make sure that insufficient mains or generator power is immediately compensated for by power from the battery. When the load reduces, the spare power is used to recharge the battery.

Solar energy: AC power available even during a grid failure
The Quattro can be used in off grid as well as grid connected PV and other alternative energy systems.
Loss of mains detection software is available.

System configuring
- In case of a stand-alone application, if settings have to be changed, this can be done in a matter of minutes with a DIP switch setting procedure.
- Parallel and three phase applications can be configured with VE.Bus Quick Configure and VE.Bus System Configurator software.
- Off grid, grid interactive and self-consumption applications, involving grid-tie inverters and/or MPPT Solar Chargers can be configured with Assistants (dedicated software for specific applications).

On-site Monitoring and control
Several options are available: Battery Monitor, Multi Control Panel, Color Control GX or other GX devices, smartphone or tablet (Bluetooth Smart), laptop or computer (USB or RS232).

Remote Monitoring and control
Color Control GX or other GX devices.
Data can be stored and displayed on our VRM (Victron Remote Management) website, free of charge.

Remote configuring
When connected to the Ethernet, systems with a Color Control GX or other GX device can be accessed and settings can be changed remotely.

Color Control GX, showing a PV application

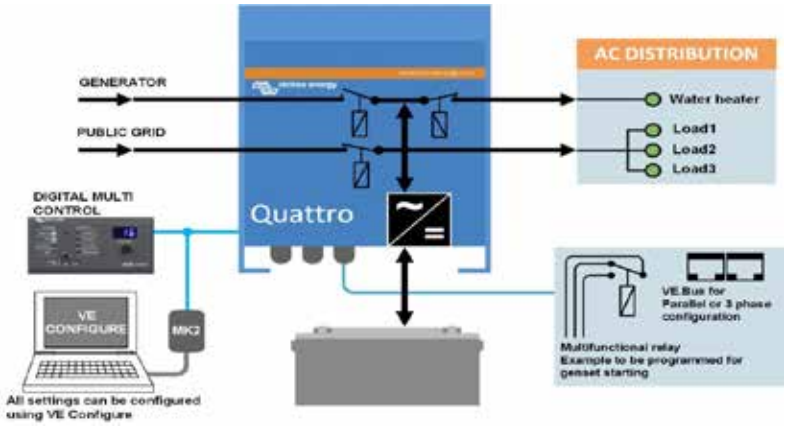

Quattro	48/3000/35-50/50 120V	24/5000/120-100/100 120V 48/5000/70-100/100 120V	48/10000/140-100/100 120V
PowerControl / PowerAssist	Yes		
Integrated Transfer switch	Yes		
AC inputs (2x)	Input voltage range: 90-140 VAC Input frequency: 45 – 65 Hz Power factor: 1		
Maximum feed through current	2x 50 A	2x 100 A	2x 100 A
INVERTER			
Input voltage range	9,5 – 17 V 19 – 33V 38 – 66 V		
Output (1)	Output voltage: 120 VAC ± 2% Frequency: 60 Hz ± 0,1%		
Cont. output power at 25°C (3)	3000 VA	5000 VA	10000 VA
Cont. output power at 25°C	2400 W	4000 W	8000 W
Cont. output power at 40°C	2200 W	3700 W	6500 W
Cont. output power at 65°C	1700 W	3000 W	4500 W
Peak power	6000 W	10000 W	20000 W
Maximum efficiency	94 %	94 / 94 / 95 %	96 %
Zero load power	25 W	30 / 30 / 35 W	60 W
Zero load power in AES mode	20 W	20 / 25 / 30 W	40 W
Zero load power in Search mode	12 W	10 / 10 / 15 W	15 W
CHARGER			
Charge voltage 'absorption' (V DC)	57,6 V	14,4 / 28,8 / 57,6 V	57,6 V
Charge voltage 'float' (V DC)	55,2 V	13,8 / 27,6 / 55,2 V	55,2 V
Storage mode (V DC)	52,8 V	13,2 / 26,4 / 52,8 V	52,8 V
Charge current house battery (A) (4)	35 A	200 / 120 / 70 A	140 A
Charge current starter battery (A)	4 A (12V and 24V models only)		
Battery temperature sensor	Yes		
GENERAL			
Auxiliary output (5)	32 A	50 A	50 A
Programmable relay (6)	3x		
Protection (2)	a-g		
VE.Bus communication port	For parallel, split phase and three phase operation, remote monitoring and system integration		
General purpose com. port	2x		
Remote on-off	Yes		
Common Characteristics	Operating temp.: -40 to +65°C Humidity (non-condensing): max. 95%		
ENCLOSURE			
Common Characteristics	Material & Colour: aluminium (blue RAL 5012) Protection category: IP 21		
Battery-connection	Four M8 bolts (2 plus and 2 minus connections)		
230 V AC-connection	Screw terminals 13 mm² (6 AWG)	Bolts M6	Bolts M6
Weight (kg)	42 lb 19 kg	75 / 66 / 66 lb 34 / 30 / 30 kg	128 lb 58 kg
Dimensions (hxwxd)	14.3 x 10.2 x 8.6 inch 362 x 258 x 218 mm	18,5 x 14,0 x 11,2 inch 470 x 350 x 280 mm 17,5 x 13,0 x 9,6 inch 444 x 328 x 240 mm 17,5 x 13,0 x 9,6 inch 444 x 328 x 240 mm	22.6 x 19,2 x 13,6 inch 572 x 488 x 344 mm
STANDARDS			
Safety	EN-IEC 60335-1, EN-IEC 60335-2-29, EN-IEC 62109-1		
Emission, Immunity	EN 55014-1, EN 55014-2, EN-IEC 61000-3-2, EN-IEC 61000-3-3, IEC 61000-6-1, IEC 61000-6-2, IEC 61000-6-3		
Road vehicles	12V and 24V models: ECE R10-5		
Anti-islanding	See our website		

1) Can be adjusted to 60 HZ; 120 V 60 Hz on request
2) Protection key:
   a) output short circuit
   b) overload
   c) battery voltage too high
   d) battery voltage too low
   e) temperature too high
   f) 230 VAC on inverter output
   g) input voltage ripple too high
3) Non-linear load, crest factor 3:1
4) At 25°C ambient
5) Switches off when no external AC source available
6) Programmable relay that can a.o. be set for general alarm,
   DC under voltage or genset start/stop function
   AC rating: 230 V / 4 A
   DC rating: 4 A up to 35 VDC, 1 A up to 60 VDC

Digital Multi Control Panel

A convenient and low cost solution for remote monitoring, with a rotary knob to set PowerControl and PowerAssist levels.

VE.Bus Smart Dongle

Measures battery voltage and temperature and allows monitoring and control of Multis and Quattros with a smartphone or other

Bluetooth enabled device.

Computer controlled operation and monitoring

Several interfaces are available:

Color Control GX and other GX devices

Monitoring and control. Locally, and also remotely on the VRM Portal.

MK3-USB VE.Bus to USB interface

Connects to a USB port (see 'A guide to VEConfigure')

VE.Bus to NMEA 2000 interface

Connects the device to a NMEA2000 marine electronics network. See the NMEA2000 & MFD integration guide

BMV-712 Smart Battery Monitor

Use a smartphone or other Bluetooth enabled device to:

- customize settings,
- monitor all important data on single screen,
- view historical data, and to
- update the software when new features become available.

Blue Smart IP22 Charger

Blue Smart IP22
12/30 (3)

Bluetooth Smart
The Blue Smart IP22 Charger is the wireless solution to monitor voltage and current, to change settings and to update the charger when new features become available.

High efficiency
With up to 94% efficiency, these chargers generate up to four times less heat when compared to the industry standard. And once the battery is fully charged, power consumption reduces to 0,5 Watt, some five to ten times better than the industry standard.

Adaptive 6-stage charge algorithm: test - bulk – absorption - recondition – float – storage
The Blue Smart Charger features a microprocessor controlled 'adaptive' battery management. The adaptive feature will automatically optimize the charging process relative to the way the battery is being used.

Storage Mode: less maintenance and aging when the battery is not in use
The storage mode kicks in whenever the battery has not been subjected to discharge during 24 hours. In the storage mode float voltage is reduced to 2,2V/cell (13,2V for a 12V battery) to minimize gassing and corrosion of the positive plates. Once a week the voltage is raised back to the absorption level to 'equalize' the battery. This feature prevents stratification of the electrolyte and sulfation, a major cause of early battery failure.

Also charges Li-ion ($LiFePO_4$) batteries
$LiFePO_4$ batteries are charged with a simple bulk – absorption – float algorithm.

NIGHT and LOW setting
When in NIGHT or LOW mode, the output current is reduced to max. 50% of the nominal output and the charger will be totally noiseless. The NIGHT mode automatically ends after 8 hours. The LOW mode can be ended manually.

Protected against overheating
Output current will reduce as temperature increases up to 50°C, but the Blue Smart Charger will not fail.

Eleven LEDs for status indication
Charge algorithm: TEST / BULK / ABSORPTION / RECONDITION / FLOAT / STORAGE / READY.
MODE button to set: NORMAL (14,4V) / HIGH (14,7V) / RECONDITION / LI-ION.

Blue Smart IP22 Charger	12V, 1 output 15 / 20 / 30A	12V, 3 outputs 15 / 20 / 30A	24V, 1 output 8 / 12 / 16A	24V, 3 outputs 16A
Input voltage range	180 – 265 VAC		180 – 265 VAC	
Charge current, normal mode	15 / 20 / 30 A		8/12/16 A	
Charge current, NIGHT or LOW	7,5 / 10 / 15 A		4 / 6 / 8 A	
Efficiency	93%		94%	
No load power consumption	0.5 W		0.5 W	
Frequency	45 – 65 Hz		45 – 65 Hz	
Number of outputs	1	3	1	3
Charge voltage 'absorption'	Normal: 14,4V High: 14,7V Li-ion: 14,2V		Normal: 28,8V High: 29,4V Li-ion: 28,4V	
Charge voltage 'float'	Normal: 13,8V High: 13,8V Li-ion: 13,5V		Normal: 27,6V High: 27,6V Li-ion: 27,0V	
Charge voltage 'storage'	Normal: 13,2V High: 13,2V Li-ion: 13,5V		Normal: 26,4V High: 26,4V Li-ion: 27,0V	
Charge algorithm	6-stage adaptive			
Can be used as power supply	Yes			
Protection	Battery reverse polarity (fuse) Output short circuit Over temperature			
Operating temp. range	-20 to +50°C			
Humidity (non-condensing)	Max 98%			
ENCLOSURE				
Material & Colour	Aluminium (blue RAL 5012)			
Battery connection	Screw terminals 13 mm^2 / AWG6			
230 V AC connection	Cable of 1,5 meter with CEE 7/7 plug, BS 1363 plug (UK) or AS/NZS 3112 plug (AU/NZ)			
Protection category	IP22			
Weight	1,3 kg			
Dimensions (h x w x d)	235 x 108 x 65 mm			
STANDARDS				
Safety	EN 60335-1, EN 60335-2-29			
Emission	EN 55014-1, EN 61000-6-3, EN 61000-3-2			
Immunity	EN 55014-2, EN 61000-6-1, EN 61000-6-2, EN 61000-3-3			
Automotive	E4-10R		E4-10R	

Blue Smart IP67 Charger 12/25

Bluetooth Smart enabled

The Blue Smart IP67 Charger is the wireless solution to monitor voltage and current, to change settings and to update the charger when new features become available.
With Bluetooth, the functionality of the IP67 charger is enhanced and is similar to that of our IP22 and IP65 chargers.

Completely encapsulated: waterproof, shockproof and ignition protected

Water, oil or dirt will not damage the Blue Smart IP67 Charger. The casing is made of cast aluminium and the electronics are moulded in resin.

The highest efficiency ever!

Setting a new industry standard: with 92% efficiency or better, these chargers waste three to four times less heat. And once the battery is fully charged, power consumption reduces to less than a Watt, some five to ten times better than the industry standard.

Adaptive 5-stage charge algorithm: bulk – absorption – recondition – float – storage

The Blue Smart Charger features a microprocessor controlled 'adaptive' battery management. The 'adaptive' feature will automatically optimise the charging process relative to the way the battery is being used.

Storage Mode: Less maintenance and aging when the battery is not in use

The storage mode kicks in whenever the battery has not been subjected to discharge during 24 hours. In the storage mode float voltage is reduced to 2,2 V/cell (13,2 V for a 12 V battery) to minimise gassing and corrosion of the positive plates. Once a week the voltage is raised back to the absorption level to 'equalize' the battery. This feature prevents stratification of the electrolyte and sulphation, a major cause of early battery failure.

Also charges Li-ion ($LiFePO_4$) batteries

$LiFePO_4$ batteries are charged with a simple bulk – absorption – float algorithm.

Protected against overheating

Can be used in a hot environment such as a machine room. Output current will reduce as temperature increases up to 60°C, but the charger will not fail.

Two LEDs for status indication

Yellow LED: bulk charge (blinking fast), absorption (blinking slow), float (solid), storage (off)
Green LED: power on

Blue Smart IP67 Charger	12/7	12/13	12/17	12/25	24/5	24/8	24/12
Input voltage range and frequency	180-265 VAC 45-65 Hz						
Efficiency	93%	93%	95%	95%	94%	96%	96%
No load power consumption	0.5W						
Charge voltage 'absorption'	Normal: 14,4V High: 14,7V Li-ion: 14,2V				Normal: 28,8V High: 29,4V Li-ion: 28,4V		
Charge voltage 'float'	Normal: 13,8V High: 13,8V Li-ion: 13,5V				Normal: 27,6V High: 27,6V Li-ion: 27,0V		
Charge voltage 'storage'	Normal: 13,2V High: 13,2V Li-ion: 13,5V				Normal: 26,4V High: 26,4V Li-ion: 27,0V		
Charge current, normal mode	7A	13A	17A	25A	5A	8A	12A
Charge current, LOW	2A	4A	6A	10A	2A	3A	4A
Charge algorithm	5-stage adaptive						
Can be used as power supply	yes						
Protection	Battery reverse polarity (fuse) Output short circuit Over temperature						
Operating temp. range	-20 to +60°C (full rated output up to 40°C) Derate 3% per °C above 40°C						
Humidity	Up to 100%						
Start interrupt option (Si) (12/25 and 24/12 models only)	Short circuit proof, current limit 0,5 A Output voltage: max one volt lower than main output						
ENCLOSURE							
Material & Colour	aluminium (blue RAL 5012)						
Battery-connection	Black and red cable of 1,5 meter						
230 V AC-connection	Cable of 1,5 meter with CEE 7/7 plug						
Protection category	IP67						
Weight (kg)	1,8	1,8	2,4	2,4	1,8	2,4	2,4
Dimensions (h x w x d in mm)	85 x 211 x 60	85 x 211 x 60	99 x 219 x 65	99 x 219 x 65	85 x 211 x 60	99 x 219 x 65	99 x 219 x 65
STANDARDS							
Safety	EN 60335-1, EN 60335-2-29						
Emission Immunity	EN 55014-1, EN 61000-6-3, EN 61000-3-2						
Automotive Directive	EN 55014-2, EN 61000-6-1, EN 61000-6-2, EN 61000-3-3						

Blue Smart IP65 Charger

Blue Smart IP65 Charger	12 V 4/5/7/10/15/25 A	24 V 5/8/13 A
Input voltage	230 VAC	
Efficiency	94%	95%
Standby power consumption	0,5 W	
Minimum battery voltage	Starts charging from down to 0V	
Charge voltage 'absorption'	Normal: 14,4 V High: 14,7 V Li-ion: 14,2 V	Normal: 28,8 V High: 29,4 V Li-ion: 28,4 V
Charge voltage 'float'	Normal: 13,8 V High: 13,8 V Li-ion: 13,5 V	Normal: 27,6 V High: 27,6 V Li-ion: 27,0 V
Charge voltage 'storage'	Normal: 13,2 V High: 13,2 V Li-ion: 13,5 V	Normal: 26,4 V High: 26,4 V Li-ion: 27,0 V
Charge current	4 / 5 / 7 / 10 / 15 / 25 A	5 / 8 / 13 A
Charge current in low current mode	2 / 2 / 2 / 3 / 4 / 10 A	2 / 3 / 4 A
Temperature compensation (lead-acid batteries only)	16 mV/°C	32 mV/°C
Can be used as power supply	Yes	
Back current drain	0,7 Ah/month (1 mA)	
Protection	Reverse polarity Output short circuit Over temperature	
Operating temp. range	-30 to + 50 °C (full rated output up to 30 °C) (cables retain flexibility at low temperature)	
Humidity (non condensing)	Max 95%	
ENCLOSURE		
Battery-connection	Black and red cable of 1,5 meter	
230 VAC-connection	Cable of 1,5 meter with CEE 7/7, BS 1363 plug (UK) or AS/NZS 3112 plug	
Protection category	IP65 (splash and dust proof)	
Weight	IP65 12 V 25 A - 24 V 13 A: 1,9 kg Other: 0,9 kg	
Dimensions (h x w x d)	IP65s 12 V 4/5 A : 45 x 81 x 182 mm IP65 12 V 7 A 24 V 5 A : 47 x 95 x 190 mm IP65 12 V 10/15 A 24 V 8 A : 60 x 105 x 190 mm IP65 12 V 25 A 24 V 13 A : 75 x 140 x 240 mm	
STANDARDS		
Safety	EN 60335-1, EN 60335-2-29	
Emission	EN 55014-1, EN 61000-6-3, EN 61000-3-2	
Immunity	EN 55014-2, EN 61000-6-1, EN 61000-6-2, EN 61000-3-3	

victron energy
BLUE POWER

www.victronenergy.com
Customer support : sales@victronenergy.com

Carry Case for Blue Smart IP65 Chargers and accessories

Rubber Bumper

Wall mount

Included

Clamps

M8 eyelets

Optional

Fused clamps

Fused M6 or M8 eyelets

Extension cable, 2 m

Autoplug

MagCode Power Clip 12V

Battery indicator panel

Battery indicator eyelet M8

Blue Smart IP65 Charger
The professional's choice

- Water, dust and chemical resistant
- Seven step smart charge algorithm
- Recovery of fully discharged 'dead' batteries
- Automatic power supply function
- Severe cold performance: down to -30°C
- Several other battery life enhancing features
- Low power mode to charge smaller batteries
- ***Li-ion*** battery mode
- Setup and configure, readout of voltage and current by ***Bluetooth Smart***

victron energy
BLUE POWER

IP65 - Charger **Guide**

Blue Smart IP65 Charger

	12V					24V		
Battery size Ah	4 & 5 A 20 - 50 Ah	7 A 20 - 70 Ah	10 A 30 - 100 Ah	15 A 50 - 150 Ah	25 A 80 - 250 Ah	5 A 20 - 50 Ah	8 A 30 - 80 Ah	13 A 50 - 130 Ah
Your IP65 Charger »	12/4&5	12/7	12/10	12/15	12/25	24/5	24/8	24/13
	●	●	●	●				
	●	●	●	●				
CLASSIC	●	●	●	●	●			
MODERN	●	●	●	●	●			
	●	●	●	●	●	●	●	●
						●	●	●
	●	●	●	●	●	●	●	●

● **Recommended**
This is the best charger for this type of battery. The battery will be charged in the most efficient way.

● **OK**
This charger can be used for this battery. It is possible that it takes longer to charge the battery than using a recommended charger.

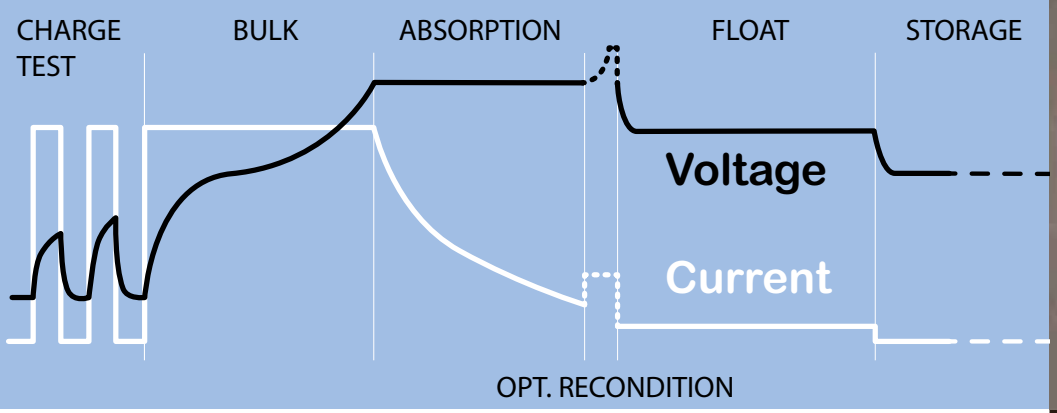

Ultra high efficiency "green" battery charger

With up to 95% efficiency, these chargers generate up to four times less heat when compared to the industry standard. And once the battery is fully charged, power consumption reduces to 0,5 Watt, some five to ten times better than the industry standard.

Reconditioning

A lead-acid battery that has been insufficiently charged or has been left discharged during days or weeks will deteriorate due to sulfation. If caught in time, sulfation can sometimes be partially reversed by charging the battery with low current up to a higher voltage.

Recovery function for fully discharged batteries

Most reverse polarity protected chargers will not recognize, and therefore not recharge a battery which has been discharged to zero or nearly zero Volts. The ***Blue Smart IP65 Charger*** however will attempt to recharge a fully discharged battery with low current and resume normal charging once sufficient voltage has developed across the battery terminals.

The VictronConnect app

Setup, readout and configure your ***Blue Smart IP65 Charger*** via your smartphone.

You can display the status of your charger and battery and even control the functions of your charger using the VictronConnect app. On your screen the readout of voltage and current is default available.

Download your app for iOS and Android here at
https://www.victronenergy.com/live/victronconnect:start

Durable, safe and silent

- Low thermal stress on the electronic components.
- Protection against ingress of dust, water and chemicals.
- Protection against overheating: the output current will reduce as temperature increases up to 60°C, but the charger will not fail.
- The chargers are totally silent: no cooling fan or any other moving parts.

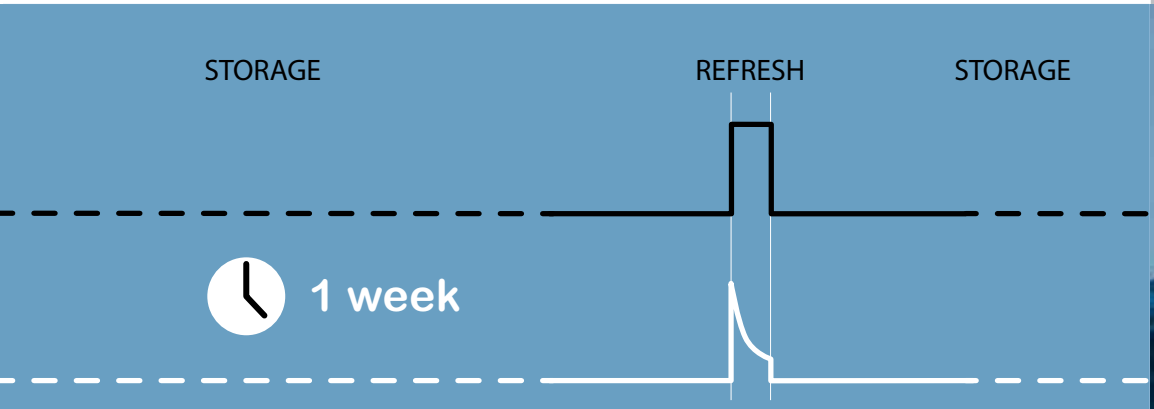

Storage mode: less corrosion of the positive plates

Even the lower float charge voltage that follows the absorption period will cause grid corrosion. It is therefore essential to reduce the charge voltage even further when the battery remains connected to the charger during more than 48 hours

Temperature compensated charging

The optimal charge voltage of a lead-acid battery varies inversely with temperature. The ***Blue Smart IP65 Charger*** measures ambient temperature during the test phase and compensates for temperature during the charge process. The temperature is measured again when the charger is in low current mode during float or storage.
Special settings for a cold or hot environment are therefore not needed.

Li-ion battery mode

The ***Blue Smart IP65 Charger*** uses a specific charging algorithm for Li-ion ($LiFePO_4$) batteries, with automatic Li-ion under voltage protection reset.

Phoenix Smart IP43 Charger

Bluetooth Smart enabled
Any Bluetooth enabled smart phone, tablet or other device can be used to monitor, to change settings and to update the charger when new software features become available.

Phoenix Smart (1+1): two outputs to charge 2 battery banks
The second output, limited to approximately 3A and with a slightly lower output voltage, is intended to top up a starter battery.

Phoenix Smart (3): three full current outputs to charge 3 battery banks
Each output can supply the full rated output current. But the total of the 3 outputs combined can never exceed the current rating of the charger.

Automatic voltage compensation
The charger compensates for voltage drop over the DC cabling by slightly increasing output voltage when the DC current increases. Please see the manual for details.

Adaptive 5-stage charge algorithm: bulk – absorption – recondition – float – storage
The Phoenix Smart Charger features our well-known 'adaptive' battery management system that can be preset to suit different types of batteries. The 'adaptive' feature will automatically optimise the charge process relative to the way the battery is being used.

The right amount of charge: variable absorption time
When only shallow discharges occur (a yacht connected to shore power for example) the absorption time is kept short in order to prevent overcharging of the battery. After a deep discharge the absorption time is automatically increased to make sure that the battery will be fully charged.

Preventing damage due to excessive gassing: the BatterySafe mode (see fig. 2)
If, in order to quickly charge a battery, a high charge current in combination with a high absorption voltage has been chosen, the charger will prevent damage due to excessive gassing by automatically limiting the rate of voltage increase once the gassing voltage has been reached (see the charge curve between 14,4 V and 15,0 V in fig. 2).

Phoenix Smart 12/50(1+1)

Less maintenance and aging when the battery is not in use: the Storage Mode (see fig. 1 & 2)
The Storage Mode kicks in whenever the battery has not been subjected to discharge during 24 hours. In the Storage Mode float voltage is reduced to 2,2 V/cell (13,2 V for a 12 V battery) to minimise gassing and corrosion of the positive plates. Once a week the voltage is raised back to the absorption level to 'equalize' the battery. This feature prevents stratification of the electrolyte and sulphation, a major cause of early battery failure.

Also charges Li-ion ($LiFePO_4$) batteries
Charger on-off control can be implemented by connecting a relay or open collector optocoupler output from a Li-ion BMS to the remote on-off port.
Alternatively full control of voltage and current can be achieved with Bluetooth.

Fully programmable charge algorithm
The charge algorithm can be programmed with help of Bluetooth or the VE.Direct interface.
Three preprogrammed algorithms can be selected with the mode button (see specifications).

Remote on-off
The remote on/off consists of two terminals: Remote H and Remote L.
A remote on/off switch or relay contact can be connected between H and L.
Alternatively, terminal H can be pulled high, or terminal L can be pulled low.
See manual for details.

Phoenix Smart 12/50(3)

VE.Direct interface
For a wired data connection to a Color Control panel, PC or other devices.
Please see the VictronConnect app under Downloads / Software on our website.

Programmable relay
Can be programmed using the VE.Direct interface or a Bluetooth enabled device to trip on an alarm or other events.

Learn more about batteries and battery charging
For more information about adaptive charging please look under Downloads / White papers on our website.

Phoenix Smart IP43 Charger	12V, 2 outputs 12/30(1+1) 12/50(1+1)	12V, 3 outputs 12/30(3) 12/50(3)	24V, 2 outputs 24/16(1+1) 24/25(1+1)	24V, 3 outputs 24/16(3) 24/25(3)
Input voltage	230 VAC (range: 210 – 250 V)			
DC input voltage range	290 – 355 VDC			
Frequency	45-65 Hz			
Power factor	0,7			
Back current drain	AC disconnected: < 0,1 mA		AC connected and charger remote off: < 6 mA	
No load power consumption	1 W			
Efficiency	12/30: 94% 12/50: 92%	12/30: 94% 12/50: 92%	94%	94%
Charge voltage 'absorption'	Normal: 14,4V High: 14,7V Li-ion: 14,2V		Normal: 28,8V High: 29,4V Li-ion: 28,4V	
Charge voltage 'float'	Normal: 13,8V High: 13,8V Li-ion: 13,5V		Normal: 27,6V High: 27,6V Li-ion: 27,0V	
Storage mode	Normal: 13,2V High: 13,2V Li-ion: 13,5V		Normal: 26,4V High: 26,4V Li-ion: 27,0V	
Fully programmable	Yes, with Bluetooth and/or VE.Direct			
Charge current house battery	30 / 50 A	30 / 50 A	16 / 25 A	16 / 25 A
Low current mode	15 / 25 A	15 / 25 A	8 / 12,5 A	8 / 12,5 A
Charge current starter battery	3 A (1+1 output models only)			
Charge algorithm	5 stage adaptive			
Protection	Battery reverse polarity (fuse, not user accessible) / Output short circuit / Over temperature			
Can be used as power supply	Yes, output voltage can be set with Bluetooth and/or VE.Direct			
Operating temp. range	-20 to 60°C (0 - 140°F) Rated output current up to 40°C, derate linearly to 20% at 60°C			
Humidity (non-condensing)	max 95%			
Relay (programmable)	DC rating: 5 A up to 28 VDC			
ENCLOSURE				
Material & Colour	aluminium (blue RAL 5012)			
Battery-connection	Screw terminals 16 mm² (AWG6)			
AC-connection	IEC 320 C14 inlet with retainer clip (AC cord with country specific plug must be ordered separately)			
Protection category	IP43 (electronic components), IP22 (connection area)			
Weight kg (lbs)	3,5 kg			
Dimensions (hxwxd)	180 x 249 x 100 mm (7.1 x 9.8 x 4.0 inch)			
STANDARDS				
Safety	EN 60335-1, EN 60335-2-29			
Emission	EN 55014-1, EN 61000-6-3, EN 61000-3-2			
Immunity	EN 55014-2, EN 61000-6-1, EN 61000-6-2, EN 61000-3-3			
Vibration	IEC68-2-6:10-150Hz/1.0G			

Retainer clip
(included)

AC cord
(must be ordered separately)

Plug options:
Europe: CEE 7/7
UK: BS 1363
Australia/New Zealand: AS/NZS 3112

Charge curves: up to the gassing voltage (fig.1), and exceeding the gassing voltage (fig.2)

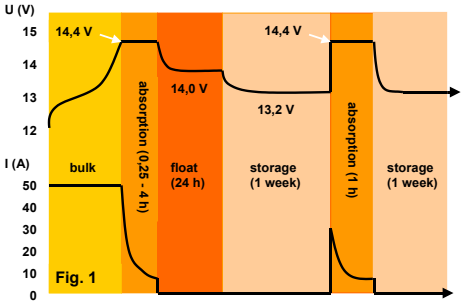

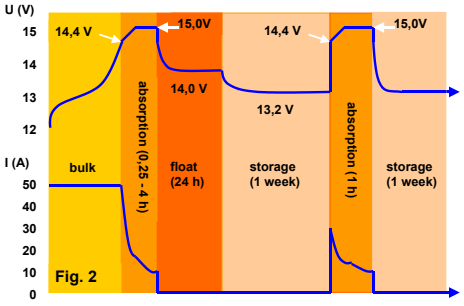

Phoenix Charger
12 V 30 A

Phoenix Charger
24 V 25 A

Adaptive 4-stage charge characteristic: bulk – absorption – float – storage

The Phoenix Charger features a microprocessor controlled 'adaptive' battery management system that can be preset to suit different types of batteries. The 'adaptive' feature will automatically optimise the process relative to the way the battery is being used.

The right amount of charge: variable absorption time

When only shallow discharges occur (a yacht connected to shore power for example) the absorption time is kept short in order to prevent overcharging of the battery. After a deep discharge the absorption time is automatically increased to make sure that the battery is completely recharged.

Preventing damage due to excessive gassing: the BatterySafe mode (see fig. 2 below)

If, in order to quickly charge a battery, a high charge current in combination with a high absorption voltage has been chosen, the Phoenix Charger will prevent damage due to excessive gassing by automatically limiting the rate of voltage increase once the gassing voltage has been reached (see the charge curve between 14,4 V and 15,0 V in fig. 2 below).

Less maintenance and aging when the battery is not in use: the Storage mode (see fig. 1 & 2 below)

The storage mode kicks in whenever the battery has not been subjected to discharge during 24 hours. In the storage mode float voltage is reduced to 2,2 V/cell (13,2 V for 12 V battery) to minimize gassing and corrosion of the positive plates. Once a week the voltage is raised back to the absorption level to 'equalize' the battery. This feature prevents stratification of the electrolyte and sulphation, a major cause of early battery failure.

To increase battery life: temperature compensation

Every Phoenix Charger comes with a battery temperature sensor. When connected, charge voltage will automatically decrease with increasing battery temperature. This feature is especially recommended for sealed batteries and/or when important fluctuations of battery temperature are expected.

Battery voltage sense

In order to compensate for voltage loss due to cable resistance, Phoenix Chargers are provided with a voltage sense facility so that the battery always receives the correct charge voltage.

Universal 90-265 V AC input voltage range and also suitable for DC supply (AC-DC and DC-DC operation)

The chargers will accept a 90-400 V DC supply.

Computer interface

Every Phoenix Charger is ready to communicate with a computer through its RS-485 data port. Together with our VEConfigure software, which can be downloaded free of charge from our website www.victronenergy.com and the data link MK3-USB (see accessories), all parameters of the chargers can be customised.

Learn more about batteries and battery charging

To learn more about batteries and charging batteries, please refer to our book 'Energy Unlimited' (available free of charge from Victron Energy and downloadable from www.victronenergy.com). For more information about adaptive charging please look under Technical Information on our website.

Charge curves: up to the gassing voltage (fig.1), and exceeding the gassing voltage (fig.2)

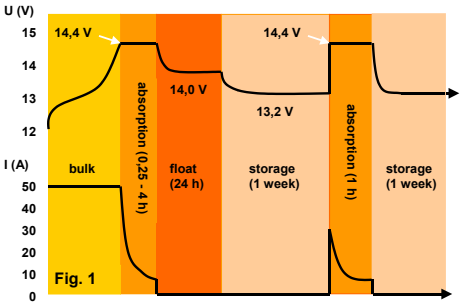

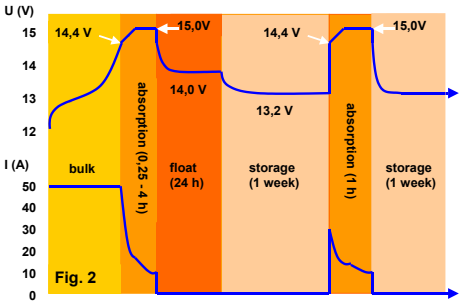

Phoenix Charger	12/30	12/50	24/16	24/25
Input voltage range (V AC)	90-265			
Input voltage range (V DC)	90-400			
Frequency (Hz)	45-65			
Power factor	1			
Charge voltage 'absorption' (V DC)	14,4	14,4	28,8	28,8
Charge voltage 'float' (V DC)	13,8	13,8	27,6	27,6
Storage mode (V DC)	13,2	13,2	26,4	26,4
Charge current house batt. (A) (2)	30	50	16	25
Charge current starter batt. (A)	4	4	4	4
Charge characteristic	4 stage adaptive			
Battery capacity (Ah)	100-400	200-800	100-200	100-400
Temperature sensor	√	√	√	√
Can be used as power supply	√	√	√	√
Forced cooling	√	√	√	√
Protection (1)	a,b,c,d			
Operating temp. range	-20 to 60°C (0 - 140°F)			
Humidity (non-condensing)	max 95%			
ENCLOSURE				
Material & Colour	aluminium (blue RAL 5012)			
Battery-connection	M6 studs			
AC-connection	screw-clamp 4 mm² (AWG 11)			
Protection category	IP 21			
Weight kg (lbs)	3,8 (8)			
Dimensions (hxwxd in mm and inches)	350x200x108 mm (13.8x7.9x4.3 inch)			
STANDARDS				
Safety	EN 60335-1, EN 60335-2-29			
Emission Immunity	EN 55014-1, EN 61000-3-2,			
Automotive Directive	EN 55014-2, EN 61000-3-3			
Vibration	IEC68-2-6:10-150Hz/1.0G			
1) Protection key: a) Output short circuit b) Battery reverse polarity detection	c) Battery voltage too high d) Temperature too high	2) Up to 40°C (100°F) ambient		

Battery Alarm
An excessively high or low battery voltage is indicated by an audible and visual alarm, and potential free contacts.

Phoenix Charger Control
The PCC panel provides remote control and monitoring of the charge process with LED indication of the charger status. In addition, the remote panel also offers output current adjustment that can be used to limit the output current and thus the power drawn from the AC supply. This is particularly useful when operating the charger from limited shore power or small gensets. The panel can also be used to change the battery charging parameters.
The brightness of the LEDs is automatically reduced during night time. Connection to the charger is with a standard UTP–cable.

BMV-700 Battery Monitor
The BMV-700 Battery Monitor features an advanced microprocessor control system combined with high resolution measuring systems for battery voltage and charge/discharge current. Besides this, the software includes complex calculation algorithms, like Peukert's formula, to exactly determine the state of charge of the battery. The BMV-700 selectively displays battery voltage, current, consumed Ah or time to go.

Skylla-IP44 12/60 (1+1)

Skylla-IP44 12/60 (1+1)

Skylla-IP44 (1+1): two outputs to charge 2 battery banks
The Skylla-IP44 (1+1) features 2 isolated outputs. The second output, limited to approximately 3A and with a slightly lower output voltage, is intended to top up a starter battery.

Skylla-IP44 (3): three full current outputs to charge 3 battery banks
The Skylla-IP44 (3) features 3 isolated outputs. All outputs can supply the full rated output current.

IP44 protection
Steel epoxy powder coated case and splash proof. Withstands the rigors of an adverse environment: heat, humidity and salt air.
Circuit boards are protected with an acrylic coating for maximum corrosion resistance.
Temperature sensors ensure that power components will always operate within specified limits, if needed by automatic reduction of output current under extreme environmental conditions.

LCD display
For status monitoring and to easily adapt the charge algorithm to a particular battery and its conditions of use.

CAN bus interface (NMEA2000)
To connect to a CAN bus network, to a Skylla-i Control panel or to the Color Control digital display.

Synchronised parallel operation
Several chargers can be connected in parallel and synchronised with help of the CAN bus interface. This is achieved by simply interconnecting the chargers with RJ45 UTP-cables.

The right amount of charge for a lead-acid battery: variable absorption time
When only shallow discharges occur the absorption time is kept short in order to prevent overcharging of the battery. After a deep discharge the absorption time is automatically increased to make sure that the battery is completely recharged.

Preventing damage due to excessive gassing: the BatterySafe mode
If, in order to quickly charge a battery, a high charge current in combination with a high absorption voltage has been chosen, the Skylla-IP44 will prevent damage due to excessive gassing by automatically limiting the rate of voltage increase once the gassing voltage has been reached.

Less maintenance and aging when the battery is not in use: the Storage mode
The Storage mode kicks in whenever the battery has not been subjected to discharge during 24 hours. In the storage mode float voltage is reduced to 2,2V/cell (26,4V for 24V battery) to minimise gassing and corrosion of the positive plates. Once a week the voltage is raised back to the absorption level to 'refresh' the battery. This feature prevents stratification of the electrolyte and sulphation, a major cause of early battery failure.

To increase battery life: temperature compensation
Every Skylla-IP44 comes with a battery temperature sensor. When connected, charge voltage will automatically decrease with increasing battery temperature. This feature is especially recommended for sealed lead-acid batteries and/or when important fluctuations of battery temperature are expected.

Battery voltage sense
In order to compensate for voltage loss due to cable resistance, the Skylla-IP44 is provided with a voltage sense facility so that the battery always receives the correct charge voltage.

Use as a power supply
As a result of the excellent control circuit, the Skylla-IP44 can be used as a power supply with perfectly stabilized output voltage if batteries or large buffer capacitors are not available.

Li-Ion (LiFePO4) ready
Simple charger on-off control can be implemented by connecting a relay or open collector opto coupler output from a Li-Ion BMS to the remote control port of the charger. Alternatively complete control of voltage and current can be achieved by connecting to the CAN bus port.

Learn more about batteries and battery charging
To learn more about batteries and charging batteries, please refer to our book 'Energy Unlimited' (available free of charge from Victron Energy and downloadable from www.victronenergy.com).

Skylla-IP44	12/60 (1+1)	12/60 (3)	24/30 (1+1)	24/30 (3)
Input voltage (VAC)	120/230 V			
Input voltage range (VAC)	90-265 V			
Maximum AC input current @ 100 VAC	10 A			
Frequency	45-65 Hz			
Power factor	0,98			
Charge voltage 'absorption' (1)	14,4 V		28,8 V	
Charge voltage 'float'	13,8 V		27,6 V	
Charge voltage 'storage'	13,2 V		26,4 V	
Charge current (2)	60 A	3 x 60A (max total output: 60 A)	30 A	3 x 30 A (max total output: 30 A)
Charge current starter batt. (A)	3 A	n. a.	3 A	n. a.
Charge algorithm	7 stage adaptive			
Battery capacity	300-600 Ah		150-300 Ah	
Charge algorithm, Li-Ion	3 stage, with on-off control or CAN bus control			
Temperature sensor	Yes			
Can be used as power supply	Yes			
Remote on-off port	Yes (can be connected to a Li-Ion BMS)			
CAN bus communication port (VE.Can)	Two RJ45 connectors, NMEA2000 protocol, not isolated			
Synchronised parallel operation	Yes, with VE.Can			
Alarm relay	DPST AC rating: 240VAC/4A DC rating: 4A up to 35VDC, 1A up to 60VDC			
Forced cooling	Yes (internal air circulation)			
Protection	Battery reverse polarity (fuse) Output short circuit Over temperature			
Operating temp. range	-20 to 60°C (Full output current up to 40°C)			
Humidity (non-condensing)	max 95%			
ENCLOSURE				
Material & Colour	steel (blue RAL 5012)			
Battery-connection	M6 bolts			
230 VAC-connection	screw-clamp 6mm² (AWG 10)			
Protection category	IP44			
Weight	6kg (14 lbs)			
Dimensions (hxwxd)	401 x 265 x 151 mm 16 x 10,5 x 6 inch			
STANDARDS				
Safety	EN 60335-1, EN 60335-2-29			
Emission	EN 55014-1, EN 61000-6-3, EN 61000-3-2			
Immunity	EN 55014-2, EN 61000-6-1, EN 61000-6-2, EN 61000-3-3			
1) Output voltage range 10-16V resp. 20-32V.	2) Up to 40°C (100°F) ambient. Output will reduce to 80% at 50°C, and to 60% at 60°C.			

BMV-700 Battery Monitor

The BMV-700 Battery Monitor features an advanced microprocessor control system combined with high resolution measuring systems for battery voltage and charge/discharge current.
The software includes complex calculation algorithms, like Peukert's formula, to exactly determine the state of charge of the battery.
The BMV-700 selectively displays battery voltage, battery current, consumed Ah or time to go.

Skylla-i Control

The Skylla-i Control panel provides remote control and monitoring of the charge process with LED status indication. In addition, the remote panel also offers input current adjustment that can be used to limit the input current and thus the power drawn from the AC supply. This is particularly useful when operating the charger from limited shore power or small gensets. The panel can also be used to change several battery charging parameters.
Several control panels can be connected to one charger or to a set of synchronised and parallel connected chargers.

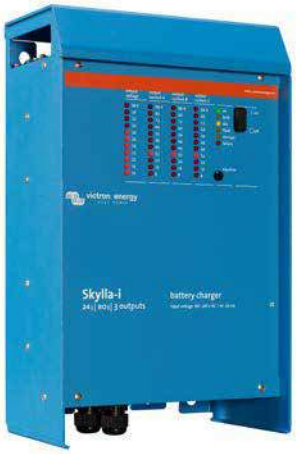

Skylla-i 24/100 (3)

Skylla-i 24/100 (1+1)

Skylla-i (1+1): two outputs to charge 2 battery banks
The Skylla-i (1+1) features 2 isolated outputs. The second output, limited to approximately 4A and with a slightly lower output voltage, is intended to top up a starter battery.

Skylla-i (3): three full current outputs to charge 3 battery banks
The Skylla-i (3) features 3 isolated outputs. All outputs can supply the full rated output current.

Rugged
Aluminium epoxy powder coated cases with drip shield and stainless steel fixings withstand the rigors of an adverse environment: heat, humidity and salt air.
Circuit boards are protected with an acrylic coating for maximum corrosion resistance.
Temperature sensors ensure that power components will always operate within specified limits, if needed by automatic reduction of output current under extreme environmental conditions.

Flexible
Next to a CAN bus (NMEA2000) interface, a rotary switch, DIP switches and potentiometers are available to adapt the charge algorithm to a particular battery and its conditions of use.
Please refer to the manual for a complete overview of the possibilities.

Important features:

Synchronised parallel operation
Several chargers can be synchronised with the CAN bus interface. This is achieved by simply interconnecting the chargers with RJ45 UTP-cables. Please see the manual for details.

The right amount of charge for a lead-acid battery: variable absorption time
When only shallow discharges occur the absorption time is kept short in order to prevent overcharging of the battery. After a deep discharge the absorption time is automatically increased to make sure that the battery is completely recharged.

Preventing damage due to excessive gassing: the BatterySafe mode
If, in order to quickly charge a battery, a high charge current in combination with a high absorption voltage has been chosen, the Skylla-i will prevent damage due to excessive gassing by automatically limiting the rate of voltage increase once the gassing voltage has been reached.

Less maintenance and aging when the battery is not in use: the Storage mode
The storage mode kicks in whenever the battery has not been subjected to discharge during 24 hours. In the storage mode float voltage is reduced to 2,2V/cell (26,4V for 24V battery) to minimise gassing and corrosion of the positive plates. Once a week the voltage is raised back to the absorption level to 'refresh' the battery. This feature prevents stratification of the electrolyte and sulphation, a major cause of early battery failure.

To increase battery life: temperature compensation
Every Skylla-i comes with a battery temperature sensor. When connected, charge voltage will automatically decrease with increasing battery temperature. This feature is especially recommended for sealed lead-acid batteries and/or when important fluctuations of battery temperature are expected.

Battery voltage sense
In order to compensate for voltage loss due to cable resistance, the Skylla-i is provided with a voltage sense facility so that the battery always receives the correct charge voltage.

Suitable for AC and DC supply (AC-DC and DC-DC operation)
The chargers also accept a DC supply.

Use as a power supply
As a result of the perfectly stabilized output voltage, the Skylla-i can be used as a power supply if batteries or large buffer capacitors are not available.

Li-Ion (LiFePO4) ready
Simple charger on-off control can be implemented by connecting a relay or open collector optocoupler output from a Li-Ion BMS to the remote control port of the charger. Alternatively complete control of voltage and current can be achieved by connecting to the galvanically isolated CAN bus port.

Learn more about batteries and battery charging
To learn more about batteries and charging batteries, please refer to our book 'Energy Unlimited' (available free of charge from Victron Energy and downloadable from www.victronenergy.com).

Skylla-i	24/80 (1+1)	24/80 (3)	24/100 (1+1)	24/100 (3)
Input voltage (VAC)	230V			
Input voltage range (VAC)	185-265V			
Input voltage range (VDC)	180-350V			
Maximum AC input current @ 180 VAC	16A		20A	
Frequency (Hz)	45-65Hz			
Power factor	0,98			
Charge voltage 'absorption' (VDC) (1)	28,8V			
Charge voltage 'float' (VDC)	27,6V			
Charge voltage 'storage' (VDC)	26,4V			
Charge current (A) (2)	80A	3 x 80A (max total output: 80A)	100A	3 x 100A (max total output: 100A)
Charge current starter batt. (A)	4A	n. a.	4	n. a.
Charge algorithm	7 stage adaptive			
Battery capacity (Ah)	400-800Ah		500-1000Ah	
Charge algorithm, Li-Ion	3 stage, with on-off control or CAN bus control			
Temperature sensor	Yes			
Can be used as power supply	Yes			
Remote on-off port	Yes (can be connected to a Li-Ion BMS)			
CAN bus communication port (VE.Can)	Two RJ45 connectors, NMEA2000 protocol, galvanically isolated			
Synchronised parallel operation	Yes, with VE.Can			
Alarm relay	DPST AC rating: 240VAC/4A DC rating: 4A up to 35VDC, 1A up to 60VDC			
Forced cooling	Yes			
Protection	Battery reverse polarity (fuse) Output short circuit Over temperature			
Operating temp. range	-20 to 60°C (Full output current up to 40°C)			
Humidity (non-condensing)	max 95%			
ENCLOSURE				
Material & Colour	aluminium (blue RAL 5012)			
Battery-connection	M8 bolts			
230 VAC-connection	screw-clamp 10mm² (AWG 7)			
Protection category	IP 21			
Weight kg (lbs)	7kg (16 lbs)			
Dimensions hxwxd in mm (hxwxd in inches)	405 x 250 x 150 (16.0 x 9.9 x 5.9)			
STANDARDS				
Safety	EN 60335-1, EN 60335-2-29			
Emission	EN 55014-1, EN 61000-6-3, EN 61000-3-2			
Immunity	EN 55014-2, EN 61000-6-1, EN 61000-6-2, EN 61000-3-3			

1) Output voltage range 20-36V. Can be set with rotary switch or potentiometers.

2) Up to 40°C (100°F) ambient. Output will reduce to 80% at 50°C, and to 60% at 60°C.

BMV-700 Battery Monitor

The BMV-700 Battery Monitor features an advanced microprocessor control system combined with high resolution measuring systems for battery voltage and charge/discharge current.
The software includes complex calculation algorithms, like Peukert's formula, to exactly determine the state of charge of the battery.
The BMV-700 selectively displays battery voltage, battery current, consumed Ah or time to go.

Skylla-i Control

The Skylla-i Control panel provides remote control and monitoring of the charge process with LED status indication. In addition, the remote panel also offers input current adjustment that can be used to limit the input current and thus the power drawn from the AC supply. This is particularly useful when operating the charger from limited shore power or small gensets. The panel can also be used to change several battery charging parameters.
Several control panels can be connected to one charger or to a set of synchronised and parallel connected chargers.

Skylla TG 24 50

Skylla TG 24 50 3 phase

Skylla TG 24 100

Perfect chargers for any type of battery

Charge voltage can be precisely adjusted to suit any sealed or unsealed battery system.
In particular, sealed maintenance free batteries must be charged correctly in order to ensure a long service life.
Overvoltage will result in excessive gassing and venting of a sealed battery. The battery will dry out and fail.

Suitable for AC and DC supply (AC-DC and DC-DC operation)

Except for the 3-phase input models, the chargers also accept a DC supply.

Controlled charging

Every TG Charger has a microprocessor, which accurately controls the charging in three steps. The charging process takes place in accordance with the IUoUo characteristic and charges more rapidly than other processes.

Use of TG Chargers as a power supply

As a result of the perfectly stabilized output voltage, a TG Charger can be used as a power supply if batteries or large buffer capacitors are not available.

Two outputs to charge 2 battery banks (24V models only)

The TG Chargers feature 2 isolated outputs. The second output, limited to approximately 4A and with a slightly lower output voltage, is intended to top up a starter battery.

To increase battery life: temperature compensation

Every Skylla TG Charger comes with a battery temperature sensor. When connected, charge voltage will automatically decrease with increasing battery temperature. This feature is especially recommended for sealed batteries which otherwise might be overcharged and dry out due to venting.

Battery voltage sense

In order to compensate for voltage loss due to cable resistance, TG Chargers are provided with a voltage sense facility so that the battery always receives the correct charge voltage.

Learn more about batteries and battery charging

To learn more about batteries and charging batteries, please refer to our book 'Energy Unlimited' (available free of charge from Victron Energy and downloadable from www.victronenergy.com).

Charge curve

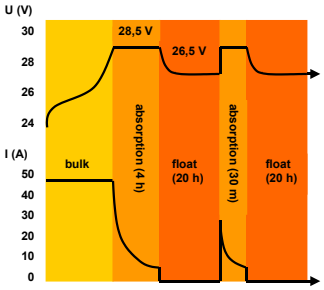

Application example

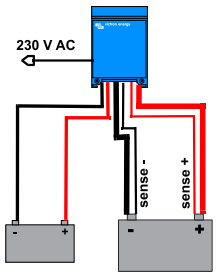

Skylla	24/30 TG 24/50 TG	24/50 TG 3 phase	24/80 TG	24/100 TG	24/100 TG 3 phase	48/25 TG	48/50 TG
Input voltage (V AC)	230	3 x 400	230	230	3 x 400	230	230
Input voltage range (V AC)	185-264	320-450	185-264	185-264	320-450	185-264	185-264
Input voltage range (V DC)	180-400	n. a.	180-400	180-400	n. a.	180-400	180-400
Frequency (Hz)	45-65						
Power factor	1						
Charge voltage 'absorption' (V DC)	28,5	28,5	28,5	28,5	28,5	57	57
Charge voltage 'float' (V DC)	26,5	26,5	26,5	26,5	26,5	53	53
Charge current house batt. (A) (2)	30 / 50	50	80	100	100	25	50
Charge current starter batt. (A)	4	4	4	4	4	n. a.	n. a.
Charge characteristic	IUoUo (three step)						
Battery capacity (Ah)	150-500	250-500	400-800	500-1000	500-1000	125-250	250-500
Temperature sensor	√						
Can be used as power supply	√						
Remote alarm	Potential free contacts 60V / 1A (1x NO and 1x NC)						
Forced cooling	√						
Protection (1)	a,b,c,d						
Operating temp. range	-40 to +50°C (-40 - 122°F)						
Humidity (non-condensing)	max 95%						
ENCLOSURE							
Material & Colour	aluminium (blue RAL 5012)						
Battery-connection	M8 studs						
230 V AC-connection	screw-clamp 2,5 mm² (AWG 6)						
Protection category	IP 21						
Weight kg (lbs)	5,5 (12.1)	13 (28)	10 (22)	10 (22)	23 (48)	5,5 (12.1)	10 (12.1)
Dimensions hxwxd in mm (hxwxd in inches)	365x250x147 (14.4x9.9x5.8)	365x250x257 (14.4x9.9x10.1)	365x250x257 (14.4x9.9x10.1)	365x250x257 (14.4x9.9x10.1)	515x260x265 (20x10.2x10.4)	365x250x147 (14.4x9.9x5.8)	365x250x257 (14.4x9.9x10.1)
STANDARDS							
Safety	EN 60335-1, EN 60335-2-29						
Emission	EN 55014-1, EN 61000-3-2						
Immunity	EN 55014-2, EN 61000-3-3						

1) Protection
   a. Output short circuit
   b. Battery reverse polarity detection
   c. Battery voltage too high
   d. Temperature too high
2) Up to 40°C (100°F) ambient

BMV-700 Battery Monitor

The BMV-700 Battery Monitor features an advanced microprocessor control system combined with high resolution measuring systems for battery voltage and charge/discharge current. Besides this, the software includes complex calculation algorithms, like Peukert's formula, to exactly determine the state of charge of the battery. The BMV-700 selectively displays battery voltage, current, consumed Ah or time to go.

Skylla Control

The Skylla Control allows you to alter the charge current and see the system status. Altering the charge current is useful if the shore power fuse is limited: the AC current drawn by the battery charger can be controlled by limiting the maximum output current, thereby preventing the shore power fuse from blowing.

Charger Switch

A remote on-off switch

Battery Alarm

An excessively high or low battery voltage is indicated by an audible and visual alarm.

Skylla charger 24V universal input and GL approval

Skylla Charger
24 V 50 A

Universal 90-265 V AC input voltage range and also suitable for DC supply

All models will operate without any adjustment needed over a 90 to 265 Volt input voltage range, whether 50 Hz or 60 Hz.
The chargers will also accept a 90-400 V DC supply.

Germanischer Lloyd approval

The Chargers have been approved by Germanischer Lloyd (GL) to environmental category C, EMC 1.
Category C applies to equipment protected from the weather.
EMC 1 applies to conducted and radiated emission limits for equipment installed on the bridge of a ship.

The approval to GL C, EMC1 implies that the Chargers also complies to IEC 60945-2002, category 'protected' and 'equipment installed on the bridge of a ship'.

The GL certification applies to 185-265 V AC supply.

Other features

- Microprocessor control
- Can be used as power supply
- Battery temperature sensor for temperature compensated charging
- Battery voltage sensing to compensate for voltage loss due to cable resistance

Other Skylla Chargers

- Standard 185-265 V AC models with additional output to charge a starter battery
- GMDSS models, with all required monitoring and alarm functions.

Learn more about batteries and battery charging

To learn more about batteries and charging batteries, please refer to our book 'Energy Unlimited' (available free of charge from Victron Energy and downloadable from www.victronenergy.com).

Charge curve

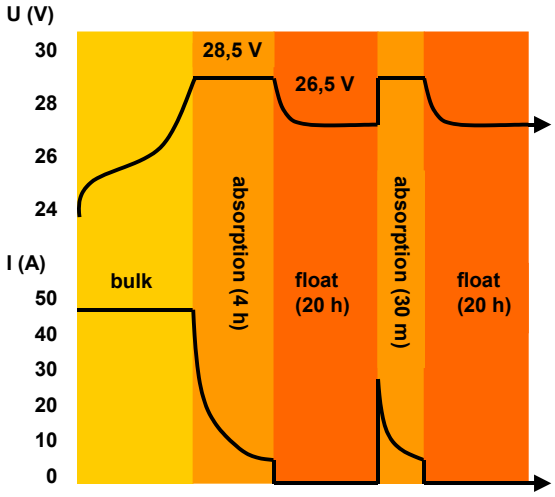

Skylla-TG	24/30 90-265 VAC	24/50 90-265 VAC	24/100-G 90-265 VAC
Input voltage (V AC)	230	230	230
Input voltage range (V AC)	90-265	90-265	90-265
Input voltage range (V DC)	90-400	90-400	90-400
Frequency (Hz)	45-65 Hz or DC		
Power factor	1		
Charge voltage 'absorption' (V DC)	28,5	28,5	28,5
Charge voltage 'float' (V DC)	26,5	26,5	26,5
Charge current house batt. (A) (2)	30 (limited to 22 A at 110V AC)	50	100
Charge current starter batt. (A)	4	4	4
Charge characteristic	IUoUo (three step)		
Battery capacity (Ah)	150-300	250-500	500-1000
Temperature sensor	√		
Can be used as power supply	√		
Remote alarm	Potential free contacts 60V / 1A (1x NO and 1x NC)		
Forced cooling	√		
Protection (1)	a, b, c, d		
Operating temp. range	-40 to +50°C (-40 - 122°F) (Full output current up to 40°C)		
Humidity (non-condensing)	max 95%		
ENCLOSURE			
Material & Colour	aluminium (blue RAL 5012)		
Battery-connection	M8 studs		
230 V AC-connection	screw-clamp 2,5 mm² (AWG 6)		
Protection category	IP 21		
Weight kg (lbs)	5,5 (12.1)	5,5 (12.1)	10 (22)
Dimensions hxwxd in mm (hxwxd in inches)	365 x 250 x 147 (14.4 x 9.9 x 5.8)	365 x 250 x 147 (14.4 x 9.9 x 5.8)	365 x 250 x 257 (14.4 x 9.9 x 10.1)
STANDARDS			
Vibration	0,7g (IEC 60945)		
Safety	EN 60335-1, EN 60335-2-29, IEC 60945		
Emission	EN 55014-1, EN 61000-3-2, IEC 60945		
Immunity	EN 55014-2, EN 61000-3-3, IEC 60945		
Germanischer Lloyd	Certificate 54 758 – 08HH		

1) Protection key:
a) Output short circuit
b) Battery reverse polarity detection
c) Battery voltage too high
d) Temperature too high

2) Up to 40°C (100°F) ambient

BMV-700 Battery Monitor
The BMV-700 Battery Monitor features an advanced microprocessor control system combined with high resolution measuring systems for battery voltage and charge/discharge current. Besides this, the software includes complex calculation algorithms, like Peukert's formula, to exactly determine the state of charge of the battery. The BMV-700 selectively displays battery voltage, current, consumed Ah or time to go.

Skylla Control
The Skylla Control allows you to alter the charge current and see the system status. Altering the charge current is useful if the shore power fuse is limited: the AC current drawn by the battery charger can be controlled by limiting the maximum output current, thereby preventing the shore power fuse from blowing.

Charger Switch
A remote on-off switch

Battery Alarm
An excessively high or low battery voltage is indicated by an audible and visual alarm.

Skylla-TG 24/30 and 24/50 GMDSS

Skylla
TG 24 30 GMDSS

GMDSS
The Global Maritime Distress & Safety System (GMDSS) was developed by the International Maritime Organisation (IMO) to improve maritime distress and safety communications.

Power supply
The Skylla TG has proven itself to be an excellent battery charger and power supply for GMDSS applications. However, when using a standard Skylla Charger, additional equipment is needed to perform the monitoring and alarm functions required for GMDSS.

Installation made easy: the Skylla GMDSS
The Victron Skylla GMDSS Charger has been designed to provide all required monitoring and alarm data. Both the battery and the GMDSS system are connected directly to the charger. Data and alarms are displayed on a digital panel (VE.Net GMDSS panel, to be ordered separately). A standard eight wire UTP-cable connects the charger to the panel.

No adjustments needed
The whole system is 'click and go': the panels are pre-programmed for GMDSS functionality. A simple, intuitive menu allows changing of settings if required.

Battery time to go
The Skylla GMDSS charger has a built-in battery controller. The capacity of the battery is fully monitored so the panel can even indicate the 'time to go' in case of a power supply black out.

Perfect charger for any type of battery
Charge voltage can be precisely adjusted to suit any VRLA or flooded battery system.

Application example

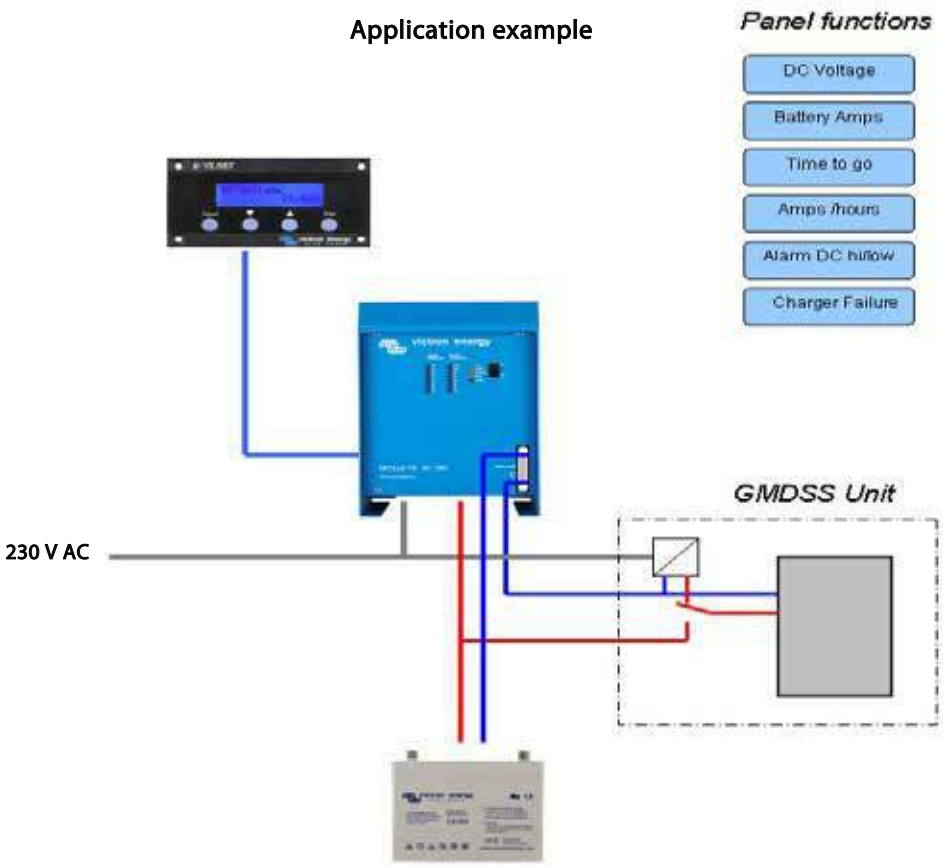

Skylla-TG	24/30 GMDSS	24/50 GMDSS
Input voltage (V AC)	230	
Input voltage range (V AC)	90 - 265	
Frequency (Hz)	45-65	
Power factor	1	
Charge voltage 'absorption' (V DC)	28,5	
Charge voltage 'float' (V DC)	26,5	
Charge current (A)	30 (limited to 22 A at 110 V AC)	50
Charge characteristic	IUoUo (three step)	
Temperature sensor	√	
Can be used as power supply	√	
Forced cooling	√	
Protection (1)	a, b, c, d	
Operating temp. range	-40 to +50°C (-40 - 122°F)	
Humidity (non-condensing)	max 95%	
ENCLOSURE		
Material & Colour	aluminium (blue RAL 5012)	
Battery-connection	Two 1,5 m cables	
GMDSS connection	One 1,5 m cable (+ to be taken directly from the battery)	
230 V AC-connection	Three wire 2,5 mm² (AWG 6) cable Length: 2 m	
Protection category	IP 21	
Weight kg (lbs)	6 (13)	
Dimensions hxwxd in mm (hxwxd in inches)	485x250x147 (19.1x9.9x5.8)	
ACCESORIES		
VE.Net GMDSS panel	To be ordered separately	
UTP-cable	To be ordered separately	
STANDARDS		
Safety	EN 60335-1, EN 60335-2-29	
Emission Immunity	EN 55014-1, EN 61000-3-2	
Immunity	EN 55014-2, EN 61000-3-3	
Maritime Nav. & Radiocomm.	IEC 60945	
1) Protection key: a) Output short circuit b) Battery reverse polarity detection	c) Battery voltage too high d) Temperature too high	2) Up to 40°C (100°F) ambient

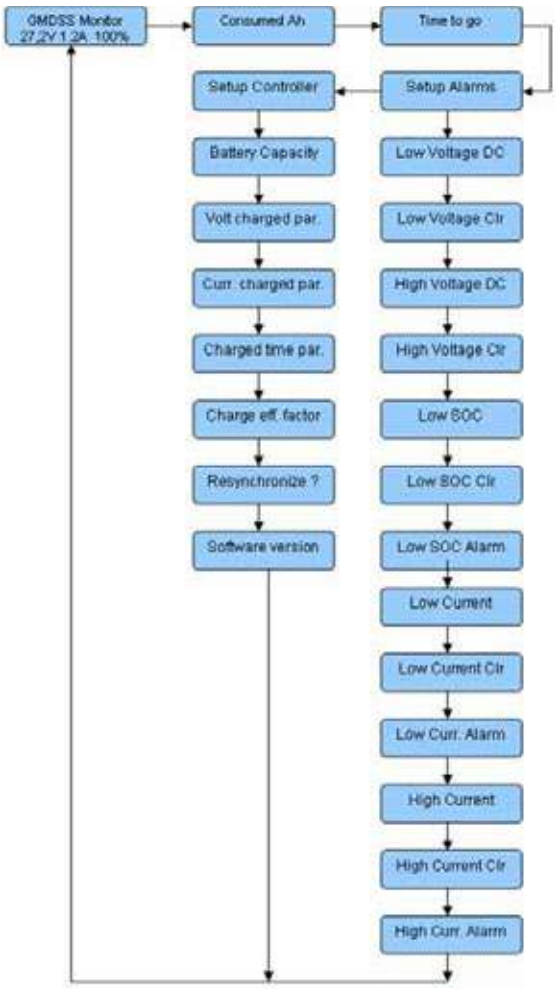

Remote panel GMDSS
The remote panel allows easy access to all important data.
Alarm settings are pre-set but can also be reprogrammed.

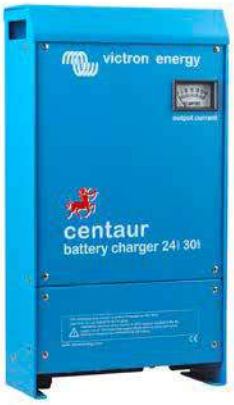

Centaur
Battery Charger 24 30

Quality without compromise
Aluminium epoxy powder coated cases with drip shield and stainless steel fixings withstand the rigors of an adverse environment: heat, humidity and salt air.
Circuit boards are protected with an acrylic coating for maximum corrosion resistance.
Temperature sensors ensure that power components will always operate within specified limits, if needed by automatic reduction of output current under extreme environmental conditions.

Universal 90-265V AC input voltage range and also suitable for DC supply (AC-DC and DC-DC operation)
All models will operate without any adjustment needed over a 90 to 265 Volt input voltage range, whether 50 Hz or 60 Hz.

The chargers also accept a 90-400 V DC supply.

Three outputs that each can supply the full output current
Three isolated outputs to simultaneously charge 3 battery banks
Each output is capable to supply the full rated current.

Three-stage charging, with temperature compensation
The Centaur charges at bulk rate until the output has reduced to 70% of the rated Amps, at which a 4 hour timer begins. After the timed period the charger switches to float rate.
An internal temperature sensor is used to compensate the charge voltage with – 2 mV/ºC (– 1 mV/ºF) per cell.
A DIP switch is available to select the optimum charge/float voltages for Flooded Lead-acid, Gel or AGM batteries.

Learn more about batteries and battery charging
To learn more about batteries and charging batteries (including the pro's and cons of multi-bank charging and intelligent charging), please refer to our book 'Electricity on Board' (available free of charge from Victron Energy and downloadable from www.victronenergy.com).

Charge curve

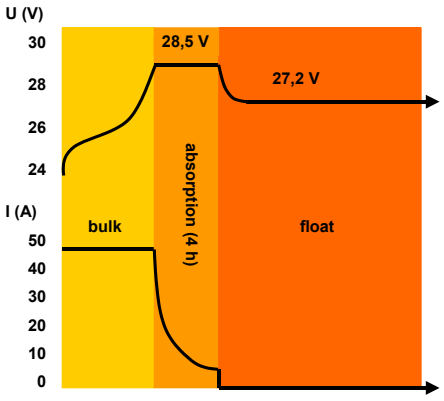

Application example

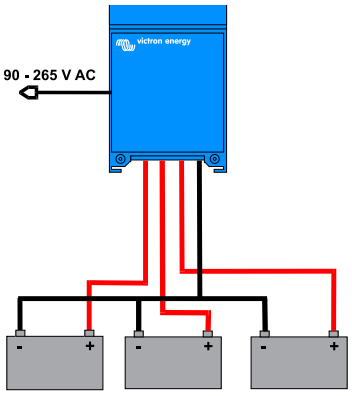

Centaur Charger	12/20	12/30 24/16	12/40	12/50	12/60 24/30	12/80 24/40	12/100 24/60
Input voltage (V AC)	90 – 265						
Input voltage (V DC)	90 – 400						
Input frequency (Hz)	45 – 65						
Power factor	1						
Charge voltage 'absorption' (V DC)	14,3 / 28,5 (1)						
Charge voltage 'float' (V DC)	13,5 / 27,0 (1)						
Output banks	3						
Charge current (A) (2)	20	30 / 16	40	50	60 / 30	80 / 40	100 / 60
Total output ammeter	Yes						
Charge characteristic	IUoU (Three stage charging)						
Recommended battery capacity (Ah)	80 - 200	120 - 300 45 - 150	160 - 400	200 - 500	240 - 600 120 - 300	320 - 800 160 - 400	400 - 1000 240 - 600
Temperature sensor	Internal, - 2mV / °C (- 1mV / °F) per cell						
Forced cooling	Yes, temperature and current controlled fan						
Protection	Output short circuit, over temperature						
Operating temp. range	- 20 to 60°C (0 - 140°F)						
Ignition protected	Yes						
Humidity (non condensing)	max 95%						
ENCLOSURE							
Material & Colour	aluminium (blue RAL 5012)						
Battery-connection	M6 studs	M6 studs	M8 studs	M8 studs	M8 studs	M8 studs	M8 studs
AC-connection	screw-clamp 4 mm² (AWG 6)						
Protection category	IP 20						
Weight kg (lbs)	3,8 (8.4)	3,8 (8.4)	5 (11)	5 (11)	5 (11)	12 (26)	12 (26)
Dimensions hxwxd in mm (hxwxd in inches)	355x215x110 (14.0x8.5x4.3)	355x215x110 (14.0x8.5x4.3)	426x239x135 (16.8x9.4x5.3)	426x239x135 (16.8x9.4x5.3)	426x239x135 (16.8x9.4x5.3)	505x255x130 (19.9x10.0x5.2)	505x255x130 (19.9x10.0x5.2)
STANDARDS							
Safety	EN 60335-1, EN 60335-2-29, UL 1236						
Emission Immunity	EN 55014-1, EN 61000-3-2						
Automotive Directive	EN 55014-2, EN 61000-3-3						

1) Standard setting. Optimum charge/float voltages for Flooded Lead-acid, Gel-Cell or AGM batteries selectable by DIP switch.
2) Up to 40°C (100°F) ambient. Output will reduce to approximately 80% of nominal at 50°C (120°F) and 60% of nominal at 60°C (140°F).

BMV-700 Battery Monitor

The BMV-700 Battery Monitor features an advanced microprocessor control system combined with high resolution measuring systems for battery voltage and charge/discharge current. Besides this, the software includes complex calculation algorithms, like Peukert's formula, to exactly determine the state of charge of the battery. The BMV-700 selectively displays battery voltage, current, consumed Ah or time to go.

Battery Alarm

An excessively high or low battery voltage is indicated by an audible and visual alarm.

Installation made easy

1. Fasten the separate mounting plate (A) to the wall where you want to place the battery charger, and simply hook up the Centaur.
2. Secure the bottom of the backside (B) to the wall.

Isolation Transformer 2000W

Isolation Transformer 3600W

Safety and prevention of galvanic corrosion
The Isolation Transformer eliminates any electrical continuity between AC shore power and the boat. It is essential for safety and eliminates the need for galvanic isolators and polarity alarms.

Safety is taken for granted in case of a normal on-shore installation. A fuse will blow or a GFCI (Ground Fault Current Interrupter) will trip in case of a short circuit or current leakage to ground. Connecting the ground wire of the shore-side supply to the metal parts of the boat will result in galvanic corrosion (see below). Bringing only the live and neutral wire on board results in an unsafe situation because GFCIs will not work nor will a fuse blow in case of a short circuit to a metal part on the boat.

Galvanic corrosion occurs when two dissimilar metals in electrical contact are simultaneously exposed to an electrically conducting fluid. Seawater and, to a lesser extent, fresh water are such fluids. In general, the more active alloy of the couple corrodes preferentially while the less active (more noble) material is cathodically protected. The rate of galvanic corrosion is a function of several variables including area ratios, conductivity of the fluid, temperature, nature of the materials, etc.

It is a misunderstanding that galvanic corrosion occurs only in metal and aluminium hulls. In fact it can occur on any boat as soon as a metallic part (the shaft and propeller) is in contact with water. Galvanic corrosion will quickly dissolve your sacrificial anodes, and attack the shaft, propeller and other metal parts in contact with water as soon as the boat is connected to the shore-side supply.
It might therefore be tempting not to connect the ground conductor: this is however extremely dangerous because GFCIs will not work nor will a fuse blow in case of a short circuit to a metal part on the boat.

The best solution to avoid galvanic corrosion and at the same time prevent any unsafe situation is to install an Isolation Transformer to connect to the shore-side supply.

The Isolation Transformer eliminates any electrical continuity between shore power and the boat. The shore power is fed to the primary side of the transformer and the ship is connected to the secondary.
The Isolation Transformer completely isolates the boat from the shore ground. By connecting all metal parts to the neutral output on the secondary side of the transformer, a GFCI will trip or a fuse will blow in case of a short circuit.

Soft start is a standard feature of a Victron Energy isolation transformer. It will prevent the shore power fuse from blowing due to the inrush current of the transformer, which would otherwise occur.

It is also recommended, for optimal safety, to connect the secondary neutral of the transformer to ground when the boat is out of the water.

3600 Watt Auto 115/230 V
This model will automatically switch to 115 V or 230 V supply, depending on input voltage.
Supply 88 V – 130 V: switches to 115 V supply
Supply 185 – 250 V: switches to 230 V supply range.
Note: The AC input voltage is raised by 1:1.05 ratio at the AC output.

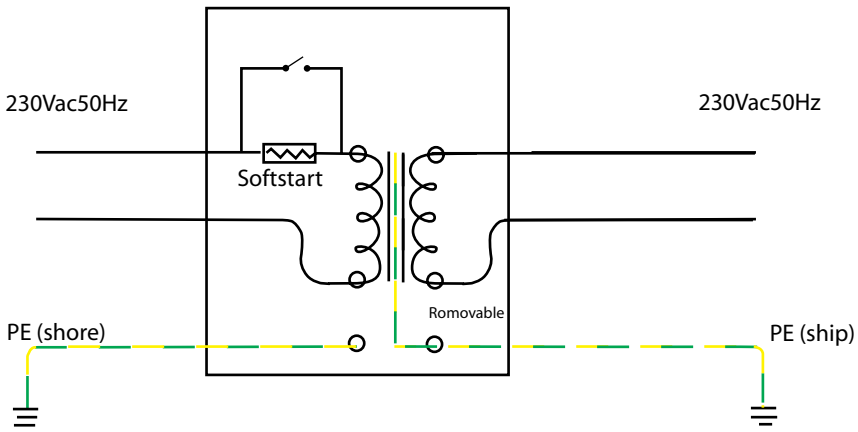

Isolation Transformers	2000 Watt (1)	3600 Watt (1)	3600 Watt Auto 115/230 V (1)	7000 Watt
Input	115 or 230 V	115 or 230 V	115 / 230 V Automatic 115/230 V switching	230 V
Output	115 or 230 V	115 or 230 V	115 or 230 V	230 V
Frequency	50/60 Hz	50/60 Hz	50/60 Hz	50/60 Hz
Rating	17 / 8,5 A	32 / 16 A	32 / 16 A	32 A
Soft start	Yes			
Transformer type	Toroidal (low noise, low weight)			
Input circuit breaker	yes			
ENCLOSURE				
Common Characteristics	Material: aluminium (blue RAL 5012)		Protection category: IP 21	
Weight	10 Kg	23 Kg	24 Kg	28 Kg
Dimensions (h x w x d), mm	375x214x110	362 x 258 x 218		
STANDARDS				
Safety	EN 60076			
1) Can be used as: 115 V to 115 V isolation transformer 115 V to 230 V isolation transformer	230 V to 230 V isolation transformer 230 V to 115 V isolation transformer			

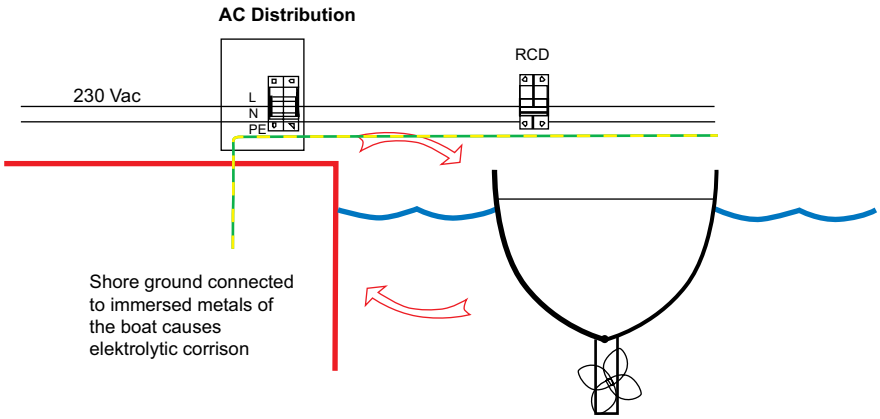

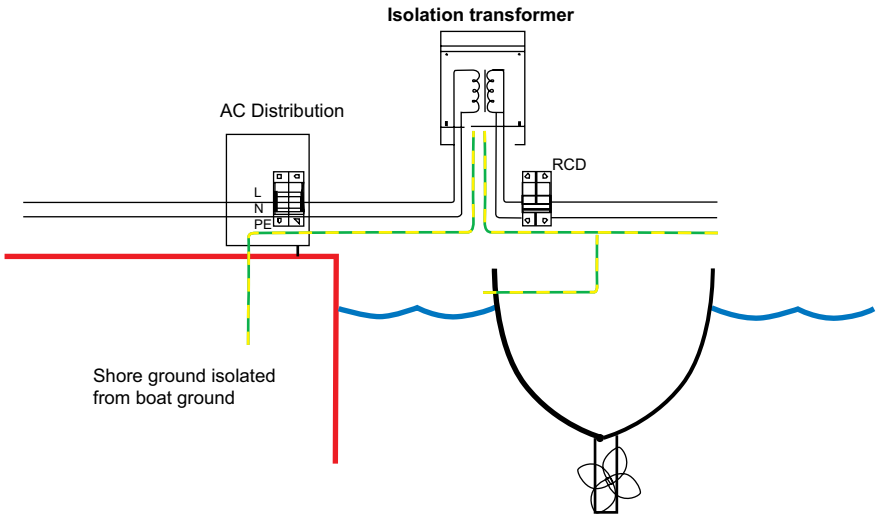

Orion-Tr Smart 12/12-30

Orion-Tr Smart 12/12-30

Bluetooth Smart enabled
Any Bluetooth enabled smart phone, tablet or other device can be used to monitor, to change settings and to update the charger when new software features become available.

Fully programmable
- Battery charge algorithm (configurable) or fixed output.
- Smart alternator compatibility: engine running detection mechanism.

Adaptive 3-stage charge algorithm: bulk – absorption – float
- For lead acid batteries it is important that during shallow discharges the absorption time is kept short in order to prevent overcharging of the battery. After a deep discharge the absorption time is automatically increased to make sure that the battery is completely recharged.
- For lithium batteries absorption time is fixed, default 2 hours.
- Alternatively, a fixed output voltage can be chosen.

Remote on-off
A remote on/off switch or relay contact can be connected to a two-pole connector. Alternatively, the H terminal (right) of the two-pole connector can be switched to battery plus, or the L terminal (left) of the two pole connector can be switched to battery minus (or the chassis of a vehicle, for example).

All models are short circuit proof and can be paralleled to increase output current
An unlimited number of units can be connected in parallel.

High temperature protected
The output current will reduce at high ambient temperature.

IP43 protection
When installed with the screw terminals oriented downwards.

Screw terminals
No special tools needed for installation.

Input fuse (not replaceable)

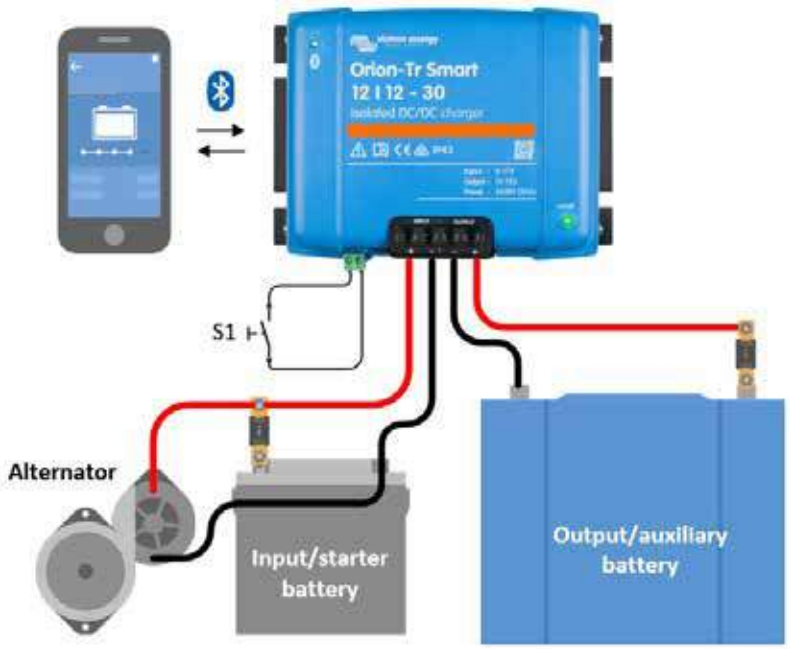

Orion-Tr Smart Chargers Isolated 220 - 280 Watt	12/12-18 (220W)	12/24-10 (240W)	24/12-20 (240W)	24/24-12 (280W)
Input voltage range (1)	8-17V	8-17V	16-35V	16-35V
Under voltage shut down	7V	7V	14V	14V
Under voltage restart	7,5V	7,5V	15V	15V
Nominal output voltage	12,2V	24,2V	12,2V	24,2V
Output voltage adjust range	10-15V	20-30V	10-15V	20-30V
Output voltage tolerance	+/- 0,2V			
Output noise	2mV rms			
Cont. output current at nominal output voltage and 40°C	18A	10A	20A	12A
Maximum output current (10 s) at nominal output voltage	25A	15A	25A	15A
Short circuit output current	40A	25A	50A	30A
Cont. output power at 25°C	280W	280W	300W	320W
Cont. output power at 40°C	220W	240W	240W	280W
Efficiency	87%	88%	88%	89%
No load input current	< 80mA	< 100mA	< 100mA	< 80mA
Standby current	Less than 1mA			
Galvanic isolation	200V dc between input, output and case			
Operating temperature range	-20 to +55°C (derate 3% per °C above 40°C)			
Humidity	Max. 95% non-condensing			
DC connection	Screw terminals			
Maximum cable cross-section	16 mm² AWG6			
Weight	1,3 kg (3 lb)			
Dimensions hxwxd	130 x 186 x 70 mm (5.1 x 7.3 x 2.8 inch)			
Standards: Safety Emission Immunity Automotive Directive	EN 60950 EN 61000-6-3, EN 55014-1 EN 61000-6-2, EN 61000-6-1, EN 55014-2 ECE R10-5			

Orion-Tr Smart Chargers Isolated 360 - 400 Watt	12/12-30 (360W)	12/24-15 (360W)	24/12-30 (360W)	24/24-17 (400W)
Input voltage range (1)	10-17V	10-17V	20-35V	20-35V
Under voltage shut down	7V	7V	14V	14V
Under voltage restart	7,5V	7,5V	15V	15V
Nominal output voltage	12,2V	24,2V	12,2V	24,2V
Output voltage adjust range	10-15V	20-30V	10-15V	20-30V
Output voltage tolerance	+/- 0,2V			
Output noise	2mV rms			
Cont. output current at nominal output voltage and 40°C	30A	15A	30A	17A
Maximum output current (10 s) at nominal output voltage minus 20%	40A	25A	45A	25A
Short circuit output current	60A	40A	60A	40A
Cont. output power at 25°C	430W	430W	430W	480W
Cont. output power at 40°C	360W	360W	360W	400W
Efficiency	87%	88%	88%	89%
No load input current	< 80mA	< 100mA	< 100mA	< 80mA
Standby current	Less than 1mA			
Galvanic isolation	200V dc between input, output and case			
Operating temperature range	-20 to +55°C (derate 3% per °C above 40°C)			
Humidity	Max. 95% non-condensing			
DC connection	Screw terminals			
Maximum cable cross-section	16 mm² (AWG6)			
Weight	12V input and/or 12V output models: 1,8 kg (3 lb) Other models: 1,6 kg (3.5 lb)			
Dimensions hxwxd	12V input and/or 12V output models: 130 x 186 x 80 mm (5.1 x 7.3 x 3.2 inch) Other models: 130 x 186 x 70 mm (5.1 x 7.3 x 2.8 inch)			
Standards: Safety Emission Immunity Automotive Directive	EN 60950 EN 61000-6-3, EN 55014-1 EN 61000-6-2, EN 61000-6-1, EN 55014-2 ECE R10-5			

1) If set to nominal or lower than nominal, the output voltage will remain stable within the specified input voltage range (buck-boost function). If the output voltage is set higher than nominal by a certain percentage, the minimum input voltage at which the output voltage remains stable (does not decrease) increases by the same percentage.

Note 1) The VictronConnect App will not display current in or current out.

Note 2) The Orion-Tr Smart is not equipped with a VE.Direct port.

High efficiency
Using synchronous rectification, full load efficiency exceeds 95%.

IP43 protection
When installed with the screw terminals oriented downwards.

Screw terminals
No special tools needed for installation.

Orion-Tr 24/12-5 (60W)

Orion-Tr 24/12-10 (120W)

Non isolated converters	Orion-Tr 24/12-5	Orion-Tr 24/12-10	Orion-Tr 24/12-15	Orion-Tr 24/12-20
Input voltage range	18-35V	18-35V	18-35V	18-35V
Output voltage	12.7V	12.5V	12.5V	12.5V
Efficiency	95%	97%	97%	97%
Continuous output current	5A	10A	15A	20A
Max. Output current	7A	12A	20A	25A
Galvanic isolation	no	no	no	no
Off load current	< 20mA	< 45mA	< 35mA	< 35mA
Operating temperature range (derate 3% per °C above 40°C)	-20 to +55°C			
DC connection	Screw terminals			
Maximum cable cross-section	3,3 mm² AWG12	6 mm² AWG10	6 mm² AWG10	6 mm² AWG10
Weight kg (lbs)	0,09 (0.20)	0,2 (0.44)	0,25 (0.55)	0,25 (0.55)
Dimensions hxwxd in mm (hxwxd in inches)	53x51x27 (2.1x2x1.1)	73x94x37 (2.9x3.7x1.5)	73x94x45 (2.9x3.7x1.8)	73x94x45 (2.9x3.7x1.8)
Standards: Safety Emission Immunity Automotive Directive	EN 60950 EN 61000-6-3, EN 55014-1 EN 61000-6-2, EN 61000-6-1, EN 55014-2 ECE R10-4			

Orion 24/12-25

Orion 24/12-40

Remote on-off connector

The remote on-off eliminates the need for a high current switch in the input wiring. The remote on-off can be operated with a low power switch or by the engine run/stop switch (see manual).

All models with adjustable output can also be used as a battery charger

For example to charge a 12 Volt starter or accessory battery in an otherwise 24V system.

All models with adjustable output can be paralleled to increase output current

Up to five units can be connected in parallel.

Easy to install

Delivery includes four Insulated Fastons Female Crimp 6.3mm (eight Fastons in case of the Orion 24/12-40).

Low power models: please see Orion-Tr series

Orion 24/12-70

Orion 24/12-70 with binding posts

Non isolated converters	Orion 24/12-25	Orion 24/12-40	Orion 24/12-70	Orion 12/24-8	Orion 12/24-10	Orion 12/24-20
Input voltage range (V)	18-35	18-35	18-35	9-18	9-18	9-18
Under voltage shutdown (V)	14	14	14	8	8	8
Under voltage restart (V)	18	18	18	10	10	10
Output voltage adjustable with potentiometer	yes	no	yes	no	yes	yes
Output voltage (V)	Adjustable 10–15V F set 13,2V	13,2	Adjustable 10–15V F set 13,2V	24	Adjustable 20-30V F set 26,4V	Adjustable 20-30V F set 26,4V
Efficiency (%)	96	95	92	95	95	93
Suitable to buffer-charge a battery	yes	no	yes	no	yes	yes
Can be connected in parallel	yes	no	yes	no	yes	yes
Continuous output current (A)	25	40	70	8	10	20
Max. Output current (A)	35	55	85	20	20	30
Fan assisted cooling (temp. controlled)	no	yes	yes	no	no	yes
Galvanic isolation	no	no	no	no	no	no
Off load current	< 15mA	< 20mA	< 20mA	< 10mA	< 15mA	< 30mA
Remote on-off	yes	yes	yes	no	no	yes
Operating temperature range (derate 3% per °C above 40°C)	-20 to +55°C	-20 to +55°C	-20 to +55°C	-20 to +55°C	-20 to +55°C	-20 to +55°C
DC connection	Faston tabs 6.3 mm	Double Faston tabs 6.3 mm	M6 bolts	Faston tabs 6.3 mm	Faston tabs 6.3 mm	M6 bolts
Weight kg (lbs)	0,7 (1.55)	0,85 (1.9)	0,9 (2.0)	0,4 (0.8)	0,4 (0.9)	0,9 (2.0)
Dimensions hxwxd in mm (hxwxd in inches)	65x88x160 (2.6x3.5x6.3)	65x88x185 (2.6x3.5x7.3)	65x88x195 (2.6x3.5x7.7)	45x90x115 (1.8x3.5x4.5)	45x90x125 (1.8x3.5x4,5)	65x88x195 (2.6x3.5x7.7)
Standards: Safety Emission Immunity Automotive Directive	EN 60950 EN 61000-6-3, EN 55014-1 EN 61000-6-2, EN 61000-6-1, EN 55014-2 ECE R10-4					

Orion-Tr 24/12-20 (240W)

Orion-Tr 24/12-20 (240W)

Remote on-off
The remote on-off eliminates the need for a high current switch in the input wiring. The remote on-off can be operated with a low power switch or by for example the engine run/stop switch (see manual).

Adjustable output voltage: can also be used as a battery charger
For example to charge a 12 Volt starter or accessory battery in an otherwise 24V system.

All models are short circuit proof and can be paralleled to increase output current
An unlimited number of units can be connected in parallel.

High temperature protected
The output current will reduce at high ambient temperature.

IP43 protection
When installed with the screw terminals oriented downwards.

Screw terminals
No special tools needed for installation.

Input fuse (not replaceable)
On 12V and 24V input models only.

Isolated converters 110 – 120W	Orion-Tr 12/12-9 (110W)	Orion-Tr 12/24-5 (120W)	Orion-Tr 24/12-9 (110W)	Orion-Tr 24/24-5 (120W)	Orion-Tr 24/48-2,5 (120W)	Orion-Tr 48/12-9 (110W)	Orion-Tr 48/24-5 (120W)	Orion-Tr 48/48-2,5 (120W)
Input voltage range (1)	8-17V	8-17V	16-35V	16-35V	16-35V	32-70V	32-70V	32-70V
Under voltage shut down	7V	7V	14V	14V	14V	28V	28V	28V
Under voltage restart	7,5V	7,5V	15V	15V	15V	30V	30V	30V
Nominal output voltage	12,2V	24,2V	12,2V	24,2V	48,2V	12,2V	24,2V	48,2V
Output voltage adjust range	10-15V	20-30V	10-15V	20-30V	40-60V	10-15V	20-30V	40-60V
Output voltage tolerance	+/- 0,2V							
Output noise	2mV rms							
Cont. output current at nominal output voltage and 25°C	9A	5A	9A	5A	2,5A	9A	5A	2,5A
Maximum output current (10 s) at nominal output voltage	12,5A	6,3A	12,5A	6,3A	3,0A	12,5A	6,3A	3,0A
Short circuit output current	32A	23A	39A	30A	19A	27A	25A	17A
Cont. output power at 25°C	110W	120W	110W	120W	120W	110W	120W	120W
Cont. output power at 40°C	85W	110W	85W	115W	115W	85W	100W	85W
Efficiency	87%	88%	85%	87%	88%	87%	86%	89%
Off load current	< 50mA	< 80mA	< 40mA	< 60 mA	< 120mA	< 50mA	< 60mA	< 80mA
Galvanic isolation	200V dc between input, output and case							
Operating temperature range	-20 to +55°C (derate 3% per °C above 40°C)							
Humidity	Max. 95% non-condensing							
DC connection	Screw terminals							
Maximum cable cross-section	6 mm² AWG10							
Weight	0,42 kg (1 lb)							
Dimensions hxwxd	100 x 113 x 47 mm (4.0 x 4.5 x 1.9 inch)							
Standards: Safety Emission Immunity Automotive Directive	EN 60950 EN 61000-6-3, EN 55014-1 EN 61000-6-2, EN 61000-6-1, EN 55014-2 ECE R10-5							

Isolated converters 220 - 280 Watt	Orion-Tr 12/12-18 (220W)	Orion-Tr 12/24-10 (240W)	Orion-Tr 24/12-20 (240W)	Orion-Tr 24/24-12 (280W)	Orion-Tr 24/48-6 (280W)	Orion-Tr 48/12-20 (240W)	Orion-Tr 48/24-12 (280W)	Orion-Tr 48/48-6 (280W)
Input voltage range (1)	8-17V	8-17V	16-35V	16-35V	16-35V	32-70V	32-70V	32-70V
Under voltage shut down	7V	7V	14V	14V	14V	28V	28V	28V
Under voltage restart	7,5V	7,5V	15V	15V	15V	30V	30V	30V
Nominal output voltage	12,2V	24,2V	12,2V	24,2V	48,2V	12,2V	24,2V	48,2V
Output voltage adjust range	10-15V	20-30V	10-15V	20-30V	40-60V	10-15V	20-30V	40-60V
Output voltage tolerance	+/- 0,2V							
Output noise	2mV rms							
Cont. output current at nominal output voltage and 40°C	18A	10A	20A	12A	6A	20A	12A	6A
Maximum output current (10 s) at nominal output voltage	25A	15A	25A	15A	8A	25A	15A	8A
Short circuit output current	40A	25A	50A	30A	25A	50A	30A	25A
Cont. output power at 25°C	280W	280W	300W	320W	320W	280W	320W	320W
Cont. output power at 40°C	220W	240W	240W	280W	280W	240W	280W	280W
Efficiency	87%	88%	88%	89%	89%	87%	89%	89%
Off load current	< 80mA	< 100mA	< 100mA	< 80mA	< 120 mA	< 80mA	< 80mA	< 80mA
Galvanic isolation	200V dc between input, output and case							
Operating temperature range	-20 to +55°C (derate 3% per °C above 40°C)							
Humidity	Max. 95% non-condensing							
DC connection	Screw terminals							
Maximum cable cross-section	16 mm² AWG6							
Weight	1,3 kg (3 lb)							
Dimensions hxwxd	130 x 186 x 70 mm (5.1 x 7.3 x 2.8 inch)							
Standards: Safety Emission Immunity Automotive Directive	EN 60950 EN 61000-6-3, EN 55014-1 EN 61000-6-2, EN 61000-6-1, EN 55014-2 ECE R10-5							

Isolated converters 360 - 400 Watt	Orion-Tr 12/12-30 (360W)	Orion-Tr 12/24-15 (360W)	Orion-Tr 24/12-30 (360W)	Orion-Tr 24/24-17 (400W)	Orion-Tr 24/48-8,5 (400W)	Orion-Tr 48/12-30 (360W)	Orion-Tr 48/24-16 (380W)	Orion-Tr 48/48-8 (380W)
Input voltage range (1)	10-17V	10-17V	20-35V	20-35V	20-35V	40-70V	40-70V	40-70V
Under voltage shut down	7V	7V	14V	14V	14V	28V	28V	28V
Under voltage restart	7,5V	7,5V	15V	15V	15V	30V	30V	30V
Nominal output voltage	12,2V	24,2V	12,2V	24,2V	48,2V	12,2V	24,2V	48,2V
Output voltage adjust range	10-15V	20-30V	10-15V	20-30V	40-60V	10-15V	20-30V	40-60V
Output voltage tolerance	+/- 0,2V							
Output noise	2mV rms							
Cont. output current at nominal output voltage and 40°C	30A	15A	30A	17A	8,5A	30A	16A	8A
Maximum output current (10 s) at nominal output voltage minus 20%	40A	25A	45A	25A	15A	40A	25A	15A
Short circuit output current	60A	40A	60A	40A	25A	60A	40A	25A
Cont. output power at 25°C	430W	430W	430W	480W	480W	430W	430W	430W
Cont. output power at 40°C	360W	360W	360W	400W	400W	360W	380W	380W
Efficiency	87%	88%	88%	89%	89%	87%	89%	89%
Off load current	< 80mA	< 100mA	< 100mA	< 80mA	< 120 mA	< 80mA	< 80mA	< 80mA
Galvanic isolation	200V dc between input, output and case							
Operating temperature range	-20 to +55°C (derate 3% per °C above 40°C)							
Humidity	Max. 95% non-condensing							
DC connection	Screw terminals							
Maximum cable cross-section	16 mm² (AWG6)							
Weight	12V input and/or 12V output models: 1,8 kg (3 lb) Other models: 1,6 kg (3.5 lb)							
Dimensions hxwxd	12V input and/or 12V output models: 130 x 186 x 80 mm (5.1 x 7.3 x 3.2 inch) Other models: 130 x 186 x 70 mm (5.1 x 7.3 x 2.8 inch)							
Standards: Safety Emission Immunity Automotive Directive	EN 60950 EN 61000-6-3, EN 55014-1 EN 61000-6-2, EN 61000-6-1, EN 55014-2 ECE R10-5							

1) If set to nominal or lower than nominal, the output voltage will remain stable within the specified input voltage range (buck-boost function).

Orion IP67 24/12 DC-DC converter, Non-isolated

Orion IP67 24/12-10
Orion IP67 24/12-20

Completely encapsulated: waterproof, shockproof and ignition protected

Water, oil or dirt will not damage the Orion IP67 DC-DC Converter. The casing is made of cast aluminium and the electronics are moulded in resin.

Extra-long input and output cables

Thanks to the cables of 1.8 meters in length, intermediate cable interconnections to increase length even more will in most cases not be needed. This is an important reliability increasing feature in an area were IP67 protection grade is needed.

Wide input voltage range

With 15 to 40 Volts input range, a stable output is ensured during surges or sags due to other equipment connected to same battery.

Protected against overheating

It can be used in a hot environment such as a machine room.

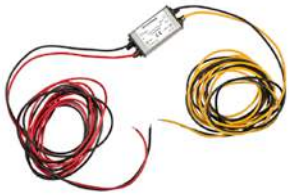

Orion IP67 24/12-5
with 1,8 m cables

Orion IP67	24/12-5	24/12-10	24/12-20
Input voltage range	15-40VDC		
Under voltage shutdown	13V		
Under voltage restart	14V		
No load current at 24V	1mA	20mA	50mA
DC output voltage	12V +/- 3%	12V +/- 3%	12V +/- 3%
Maximum continuous output current	5A	10A	20A
Efficiency	93%	93%	95%
Ripple & Noise	75mV pp		
Operating temperature range (derate 3% per °C above 40°C)	-20 to +70°C (full rated output up to 40°C)		
Overload protection	Hiccup mode, recovers automatically after fault condition is removed		
Short circuit proof	Yes		
Protection against reverse polarity connection	With external fuse or circuit breaker (not included)		
ENCLOSURE			
Material & Colour	Aluminium (blue RAL 5012)		
Protection category	IP67		
DC connection	Two input and two output cables, length 1,8m		
Cable cross section, input	0,8mm² (18 AWG)	1,5mm² (15 AWG)	2,6mm² (13 AWG)
Cable cross section, output	0,8mm² (18 AWG)	1,5mm² (15 AWG)	2,6mm² (13 AWG)
Weight (kg)	50 g	300 g	300 g
Dimensions (h x w x d in mm)	25 x 43 x 20	74 x 74 x 32	74 x 74 x 32
STANDARDS			
Safety	EN 60950		
Emission	EN 61000-6-3, EN 55014-1		
Immunity	EN 55014-2, EN 61000-6-1, EN 61000-6-2		
Automotive Directive	ECE R10-4		
Vibration	IEC 68-2-6: 10-150 Hz / 1.0 G		

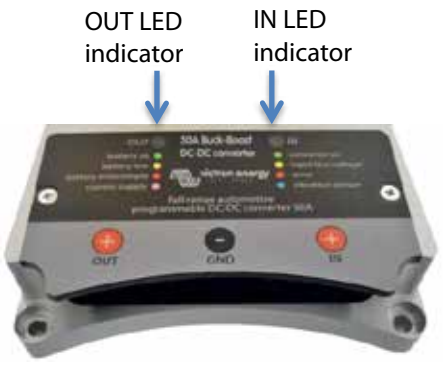

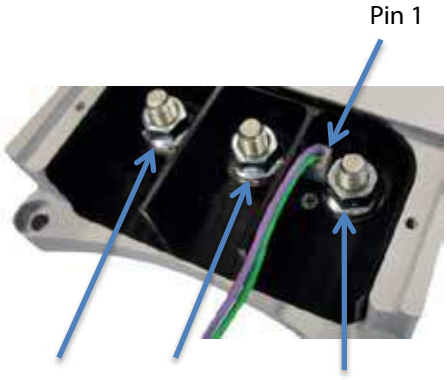

DC-DC Converter for charging a 12V or 24V service battery in vehicles with a smart alternator (regenerative braking, Euro 5 and Euro 6 engines)

The Buck-Boost DC-DC Converter is a DC-DC Converter for charging a 12V or 24V service battery in vehicles with a smart alternator. The converter will charge the auxiliary battery with a pre-set charge voltage, eliminating high voltages (e.g. Mercedes: 15,4V) and low voltages.

'Engine running' detection system

Deep discharge of the vehicle's starting battery is avoided by a built-in 'engine running' detection system.
Instead of this detection system, the converter can also be activated by means of a programmable input (D+, CAN bus or (+)15 connection).

Fully programmable

The converter can be fully programmed by means of a simple and user-friendly PC application.
(USB type A male to USB type B male cable needed)

One product for 12V, 24V and 12/24V systems

The converter can be programmed to charge a 12V or a 24V auxiliary battery from either a 12V or a 24V alternator and starter battery.

Charge current and input current limiter

The output current is determined by the following factors:

- The maximum charge current setting.
- The maximum input current setting.
- The maximum operating temperature limit of the converter.

Input status indication (LED)

Green: converter on.
Yellow: input voltage below threshold, converter off.
Red: over temperature, converter off.
Blue, quick flash: engine running, converter will start after preset delay.
Blue, slow flash: the converter is OFF and activation is blocked due to low input voltage.

Output status indication (LED)

Green: converter off, battery voltage normal.
Yellow: converter off, battery voltage low.
Red: converter off, battery discharged or not connected.
Purple: converter on.

Buck-Boost DC-DC Converter	25A	50A	100A
Input voltage range	10-30V		
Under voltage threshold	10V		
Output voltage range	10-30V		
Maximum charge current	12V : 25A 24V : 15A	12V : 50A 24V : 25A	12V : 100A 24V : 50A
Power consumption			
Converter off, LEDs off (power save mode)	7 mA		
On/off input (pin 1, purple wire)			
'On' threshold voltage	> 2V		
Maximum input voltage	30V		
Output pin 1 and pin 2			
Output voltage if activated	V_{pinout} = Vin		
Maximum current (per pin)	I_{pinout} = 1A		
GENERAL			
Operating temperature range	-25 +60°C		
Ambient temperature	Max current: up to 60°C		
Weight	0,6kg	1,4kg	4,1kg
Dimensions	165 x 120 x 30mm	213 x 120 x 30mm	288 x 162 x 95mm

Color Control GX

The Color Control (CCGX) provides intuitive control and monitoring for all Victron power systems. The list of Victron products that can be connected is endless: Inverters, Multis, Quattros, MPPT solar chargers, BMV battery monitors, Lynx Ion + Shunt and more.

VRM Online Portal

Besides monitoring and controlling products locally on the CCGX itself, all readings are also forwarded to our free remote monitoring website: the VRM Online Portal. To get an impression, try the demo on https://vrm.victronenergy.com. See also the screenshots below.

Remote Console on VRM

Monitor, control and configure the CCGX remotely, over the internet. Just like standing in front of the device, everything can also be done remotely. The same functionality is also available on the local network, Remote Console on LAN.

Automatic genset start/stop

A highly customizable start/stop system. Use state of charge, voltage, load and other parameters. Define a special set of rules for quiet times, and optionally a monthly test run.

The heart of ESS – Energy Storage System

The CCGX is the Energy Manager in an ESS system. More information in the ESS manual: https://www.victronenergy.com/live/ess:design-installation-manual

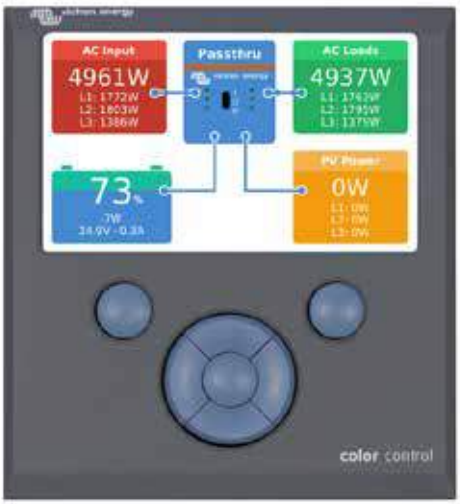

Data logging

When connected to the internet, all data is sent to the VRM Portal. When there is no internet connection available, the CCGX will store the data internally, up to 48 hours. By inserting a micro SD-card or USB stick, more data can be stored. These files can then be uploaded to the VRM Portal, or offline converted with the VictronConnect app, for analysis.

Supported products

- Multis and Quattros, including split-phase and three-phase systems. Monitoring and control (on/off and current limiter). Changing configuration is possible (only remotely via the internet, not without an internet connection).
- BlueSolar MPPT Solar Chargers with a VE.Direct port.
- BlueSolar MPPT 150/70 and the MPPT 150/85 with VE.Can port.
- SmartSolar MPPT 150/70 and the MPPT 150/100 with VE.Can port. When multiple BlueSolar MPPTs or SmartSolar MPPTs with VE.Can are used in parallel, all the information is combined as one. See also our blog-post about synchronizing multiple MPPT 150/70 solar chargers.
- BMV-700 family can be connected directly to the VE.Direct ports on the CCGX. Use the VE.Direct Cable for this.
- BMV-600 family can be connected to the VE.Direct ports on the CCGX. Requires an accessory cable.
- Lynx Ion + Shunt
- Lynx Shunt VE.Can
- Skylla-i battery chargers
- NMEA2000 tank sensors
- A USB GPS can be connected to the USB port. Location and speed will be visible on the display, and the data is sent to the VRM Portal for tracking purposes. The map on VRM will show the latest position.
- Fronius PV Inverters

When more than two VE.Direct products must be connected, USB can be used.

Internet connection

The CCGX can be connected to internet with an Ethernet cable and via wifi. To connect via wifi, a wifi USB accessory is required. The CCGX has no internal cellular modem: there is no slot for a sim-card. Use an off-the-shelf GPRS or 3G router instead. See the blog post about 3G routers.

Other highlights

- The CCGX can automatically update itself from the internet, when there is a new software version available.
- Multiple languages: English, Czech, German, Spanish, French, Italian, Dutch, Russian, Swedish, Turkish, Chinese, Arabic.
- Use the CCGX as a Modbus-TCP gateway to all connected Victron products. See our Modbus-TCP FAQ for more information.
- Powered by the Venus OS – embedded linux. https://github.com/victronenergy/venus/wiki/sales-pitch

Color Control GX			
Power supply voltage range	8 – 70V DC		
Current draw	12V DC	24V DC	48V DC
Display off	140mA	80mA	40mA
Display at minimum intensity	160mA	90mA	45mA
Display at maximum intensity	245mA	125mA	65mA
Potential free contact	3A / 30V DC / 250V AC (Normally open)		
	Communication ports		
VE.Direct	2 separate VE.Direct ports – isolated		
VE.Can	2 paralleled RJ45 sockets – isolated		
VE.Bus	2 paralleled RJ45 sockets – isolated		
USB	2 USB Host ports – not isolated		
Ethernet	10/100/1000MB RJ45 socket – isolated except shield		
	3rd party interfacing		
Modbus-TCP	Use Modbus-TCP to monitor and control all products connected to the Color Control GX		
JSON	Use the VRM JSON API to retrieve data from the VRM Portal		
	Other		
Outer dimensions (h x w x d)	130 x 120 x 28mm		
Operating temperature range	-20 to +50°C		
	Standards		
Safety	EN 60950-1:2005+A1:2009+A2:2013		
EMC	EN 61000-6-3, EN 55014-1, EN 61000-6-2, EN 61000-6-1, EN 55014-2		
Automotive	E4-10R-053535		

Overview - Multi with PV Inverter on output

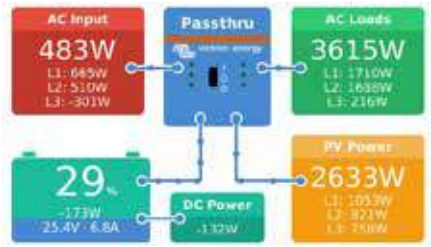

Main menu

Mobile & boat overview

Alarm notifications

Genset control page

Tiles overview

VRM Portal - Dashboard

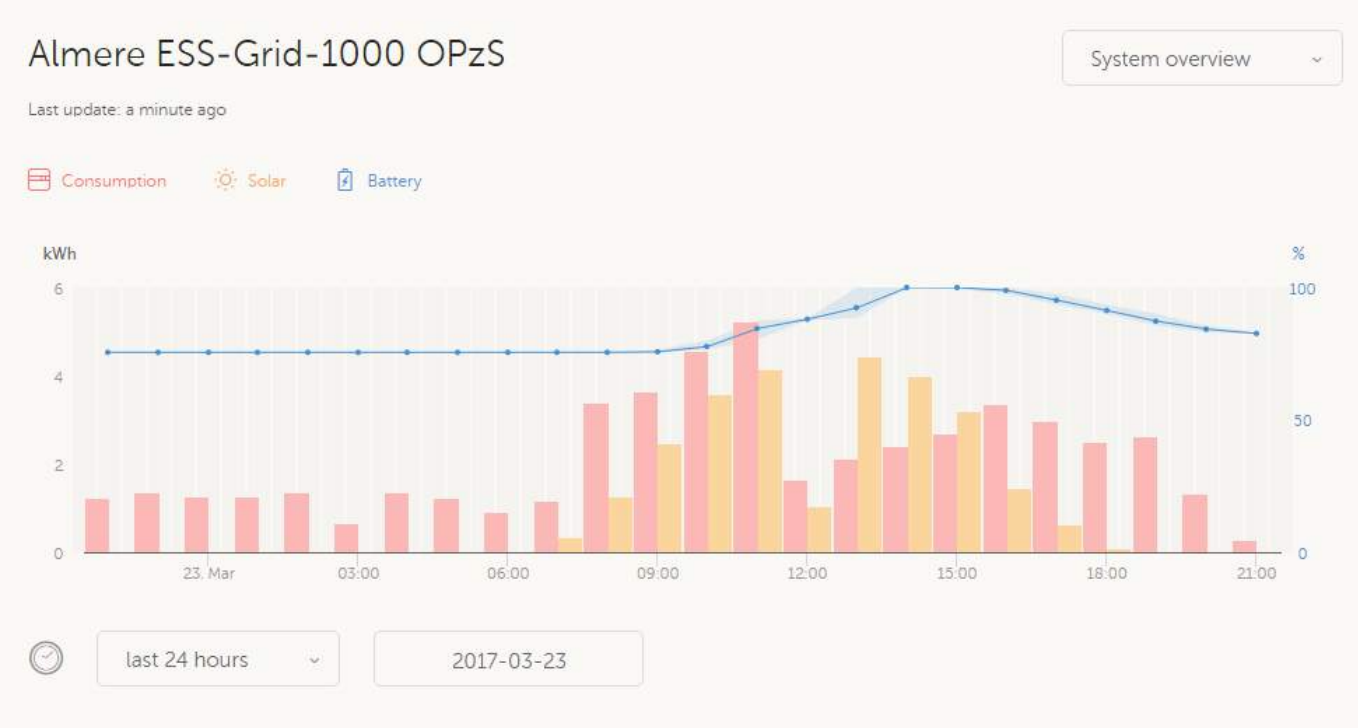

VRM Portal – Remote Console

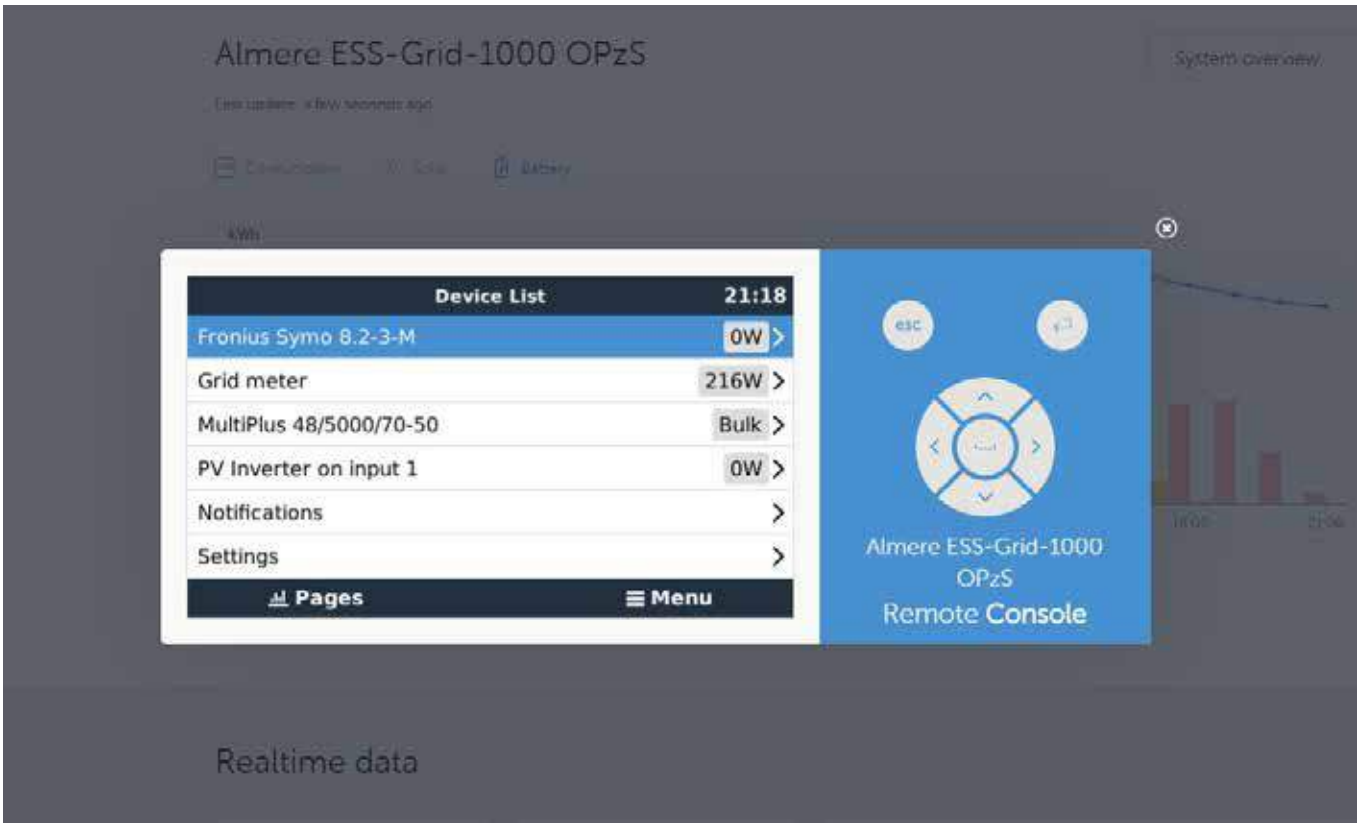

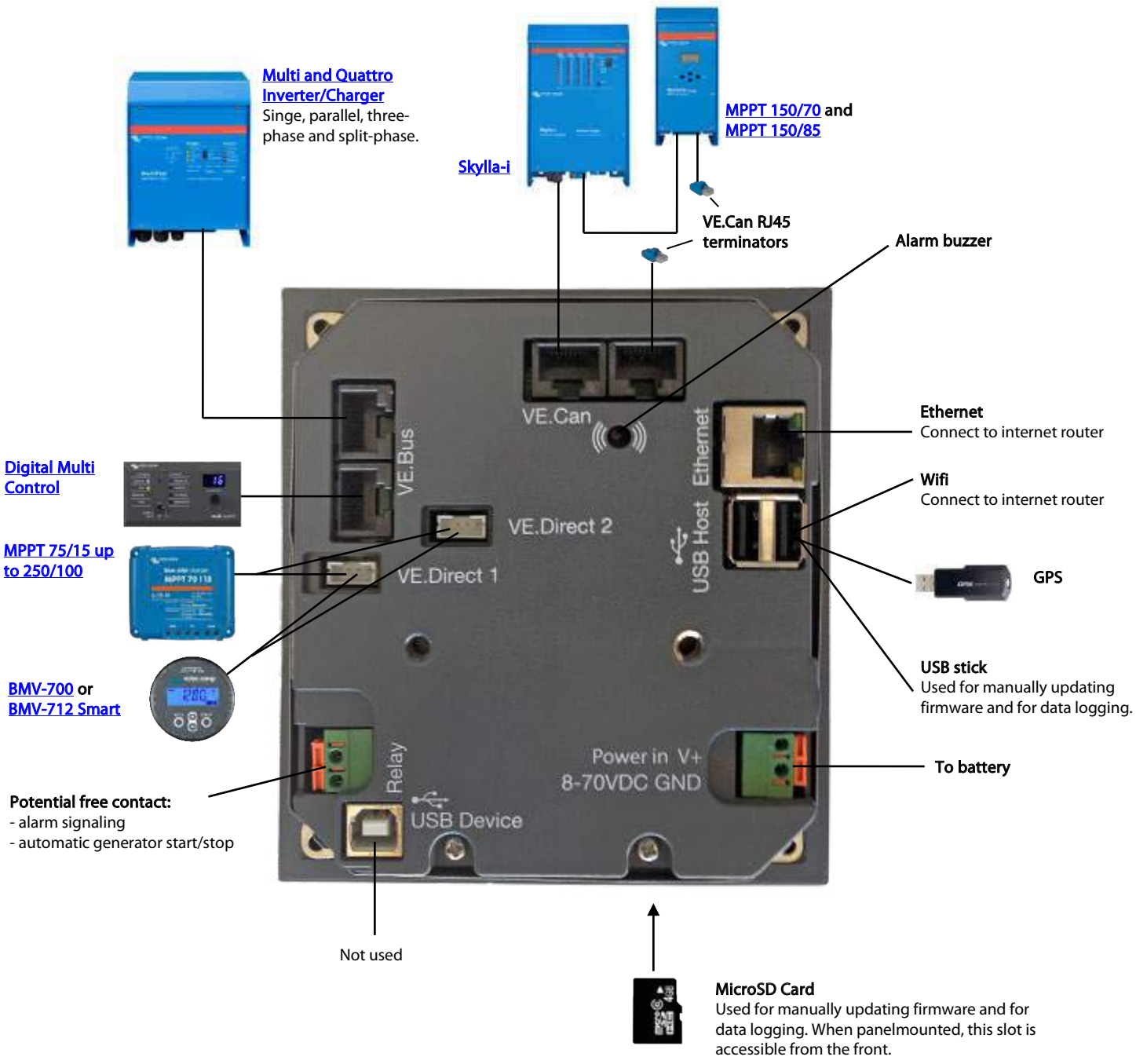
Multi and Quattro Inverter/Charger
Singe, parallel, three-phase and split-phase.
Skylla-i
MPPT 150/70 and MPPT 150/85
VE.Can RJ45 terminators
Alarm buzzer
VE.Can
VE.Bus
Ethernet
Ethernet
Connect to internet router
Digital Multi Control
VE.Direct 2
USB Host
Wifi
Connect to internet router
MPPT 75/15 up to 250/100
VE.Direct 1
GPS
USB stick
Used for manually updating firmware and for data logging.
BMV-700 or BMV-712 Smart
Relay
Power in V+
8-70VDC GND
To battery
Potential free contact:
- alarm signaling
- automatic generator start/stop
USB Device
Not used
MicroSD Card
Used for manually updating firmware and for data logging. When panelmounted, this slot is accessible from the front.

Venus GX

Venus GX with connectors

Venus GX front angle

Venus GX

The Venus GX provides intuitive control and monitoring for all Victron power systems. The list of Victron products that can be connected is endless: Inverters, Multis, Quattros, MPPT solar chargers, BMV battery monitors, Lynx Ion + Shunt and more.

VRM Online Portal

All readings are forwarded to our free remote monitoring website: the VRM Online Portal. To get an impression, try the demo on https://vrm.victronenergy.com. See also the screenshots below.

Remote Console on VRM

The way to access the device for setting up, as well as monitoring, is via Remote Console. Either via VRM, via the built-in WiFi Access Point, or on the local LAN/WiFi network.

Automatic genset start/stop

A highly customizable start/stop system. Use state of charge, voltage, load and other parameters. Define a special set of rules for quiet times, and optionally a monthly test run.

The heart of ESS – Energy Storage System

The Venus GX is the Energy Manager in an ESS system. More information in the ESS manual: https://www.victronenergy.com/live/ess:design-installation-manual

Data logging

When connected to the internet, all data is sent to the VRM Portal. When there is no internet connection available, the Venus GX will store the data internally, up to 48 hours. By inserting a micro SD-card or USB stick, more data can be stored. These files can then be uploaded to the VRM Portal, or offline converted with the VictronConnect app, for analysis.

Supported products

- Multis and Quattros, including split-phase and three-phase systems. Monitoring and control (on/off and current limiter). Changing configuration is possible (only remotely via the internet, not without an internet connection).
- EasySolar 1600VA
- BlueSolar MPPT Solar Chargers with a VE.Direct port.
- BlueSolar MPPT 150/70 and the MPPT 150/85 with VE.Can port.
- SmartSolar MPPT 150/70 and the MPPT 150/100 with VE.Can port. When multiple BlueSolar MPPTs or SmartSolar MPPTs with VE.Can are used in parallel, all the information is combined as one. See also our blog-post about synchronizing multiple MPPT 150/70 solar chargers.
- BMV-700 family can be connected directly to the VE.Direct ports on the Venus GX. Use the VE.Direct Cable for this.
- BMV-600 family can be connected to the VE.Direct ports on the Venus GX. Requires an accessory cable.
- Lynx Ion + Shunt
- Lynx Ion BMS
- Lynx Shunt VE.Can
- Skylla-i battery chargers
- NMEA2000 tank sensors
- A USB GPS can be connected to the USB port. The data is sent to the VRM Portal for tracking purposes. The map on VRM will show the latest position.
- Fronius PV Inverters

When more than two VE.Direct products must be connected, USB can be used.

Internet connection

The Venus GX can be connected to internet with an Ethernet cable and via Wi-Fi. The Venus GX has no internal cellular modem: there is no slot for a sim-card. Use an off-the-shelf GPRS or 3G router instead. See the blog post about 3G routers.

Tank level inputs

The tank level inputs are resistive: connect them to a resistive tank sender. Such tank senders are not supplied by Victron. The tank level ports can each be configured to work with either European tank senders (0 - 180 Ohm), or US (240 - 30 Ohm).

Other highlights

- The Venus GX can automatically update itself from the internet, when there is a new software version available.
- Multiple languages: English, Czech, German, Spanish, French, Italian, Dutch, Russian, Swedish, Turkish, Chinese, Arabic.
- Use the Venus GX as a Modbus-TCP gateway to all connected Victron products. See our Modbus-TCP FAQ for more information.
- Powered by the Venus OS – embedded linux. https://github.com/victronenergy/venus/wiki/sales-pitch

Venus GX			
Power supply voltage range	8 – 70V DC		
Current Draw	210 mA @ 12V	110 mA @ 24V	60 mA @ 48V
Communication ports			
VE.Direct	2 separate VE.Direct ports – isolated		
VE.Can	2 paralleled RJ45 sockets – isolated		
CAN	2nd CAN interface – non isolated		
VE.Bus	2 paralleled RJ45 sockets – isolated		
USB	2 USB Host ports – not isolated		
Ethernet	10/100/1000MB RJ45 socket – isolated except shield		
WiFi Access Point	Use to connect to Remote Console		
WiFi Client	Connect the Venux GX to an existing WiFi network		
IO			
Potential free contact	NO/COM/NC – 6 A 250 VAC/30 VDC		
Tank level inputs	3 x Configurable for European (0 - 180 Ohm) or US (240 - 30 Ohm)		
Temperature level inputs	2 x Requires ASS000001000.		
3rd party interfacing			
Modbus-TCP	Use Modbus-TCP to monitor and control all products connected to the Venus GX		
JSON	Use the VRM JSON API to retrieve data from the VRM Portal		
Other			
Outer dimensions (h x w x d)	45 x 143 x 96		
Operating temperature range	-20 to +50°C		
Standards			
Safety	EN 60950-1:2005+A1:2009+A2:2013		
EMC	EN 61000-6-3, EN 55014-1, EN 61000-6-2, EN 61000-6-1, EN 55014-2		
Automotive	In progress		

Wall mounted display enclosures

		Rectangular panels	Round panels	Rectangular panels	Round panels and Rectangular panels
Dimensions (h x w x d in mm)		88 x 130 x 40	88 x 130 x 47	163 x 135 x 72	244 x 135 x 75
Article code	Product	Suitable for:			
BPA000100000R	Battery Alarm GX	√			
REC000200000R	Skylla-i Control GX	√			
DMC000200000R	Digital Multi Control 200/200A GX	√			
BAM010700000	Battery Monitor BMV-700		√		√
BAM010702000	Battery Monitor BMV-702		√		√
SCC900500000	MPPT Control		√		√
BPP000300100R	Color Control GX			√	√
BPP000200100R	VE.Net Blue Power Panel GX			√	√

1

Enclosure for 65 x 120 mm GX panels

3

Enclosure for Color Control GX
(also accepts a VE.Net Blue Power Panel GX)

2

Enclosure for BMV battery monitor or MPPT Control

4

Enclosure for Color Control GX and a BMV or MPPT control
(also accepts a VE.Net Blue Power Panel GX)

Smart BatteryProtect BP-65

Smart BatteryProtect BP-100

Smart BatteryProtect BP-220

Connector with preassembled DC minus cable (included)

Protects the battery against excessive discharge and can be used as a system on/off switch

The Smart BatteryProtect disconnects the battery from non-essential loads before it is completely discharged (which would damage the battery) or before it has insufficient power left to crank the engine.
The on/off input can be used as a system on/off switch.

12/24V auto ranging

The Smart BatteryProtect automatically detects system voltage one time only.

Bluetooth: programming made easy

When using Bluetooth to program the Smart BatteryProtect any required engage/disengage levels can be set.
Alternatively, one of nine predefined engage/disengage levels can be set with the programming pin (see manual).
If required, Bluetooth can be disabled.

A special setting for Li-ion batteries

In this mode the BatteryProtect can be controlled by the VE.Bus BMS.
Note: the BatteryProtect can also be used as a charge interrupter in between a battery charger and a Li-ion battery. See connection diagram in the manual.

Ultra-low current consumption

This is important in case of Li-ion batteries, especially after low voltage shutdown.
Please see our Li-ion battery datasheet and the VE.Bus BMS manual for more information.

Over voltage protection

To prevent damage to sensitive loads due to over voltage, the load is disconnected whenever the DC voltage exceeds 16.3V respectively 32.6V.

Ignition proof

No relays but MOSFET switches, and therefore no sparks.

Delayed alarm output

The alarm output is activated if the battery voltage drops below the preset disconnect level during more than 12 seconds. Starting the engine will therefore not activate the alarm. The alarm output is a short circuit proof open collector output to the negative (minus) rail, max. current 50 mA. The alarm output is typically used to activate a buzzer, LED or relay.

Delayed load disconnect and delayed reconnect

The load will be disconnected 90 seconds after the battery voltage drops below the preset level. If the battery voltage increases again to the connect threshold within this time period (after the engine has been started for example), the load will not be disconnected.
The load will be reconnected 30 seconds after the battery voltage has increased to more than the preset reconnect voltage.

Smart BatteryProtect		Smart BP-65	Smart BP-100	Smart BP-220
Maximum continuous load current*		65A	100A	220A
Peak current (during 30 seconds)		250A	600A	600A
Operating voltage range		6 –35V		
Current consumption	BLE On	When on: 1,4 mA When off or low voltage shutdown: 0,9 mA		
	BLE Off	When on: 1,2 mA When off or low voltage shutdown: 0,7 mA		
Alarm output delay		12 seconds		
Maximum load on alarm output		50 mA (short circuit proof)		
Load disconnect delay		90 seconds (immediate if triggered by the VE.Bus BMS)		
Load reconnect delay		30 seconds		
Default thresholds		Disengage: 10,5V or 21V Engage: 12V or 24V		
Operating temperature range		Full load: -40°C to +40°C (up to 60% of nominal load at 50°C)		
IP rating		Electronics: IP67 (potted) Connections: IP00		
Connection		M6	M8	M8
Weight		0,2 kg 0.5 lbs	0,5 kg 0.6 lbs	0,8 kg 1.8 lbs
Dimensions (hxwxd)		40 x 48 x 106 mm 1.6 x 1.9 x 4.2 inch	59 x 42 x 115 mm 2.4 x 1.7 x 4.6 inch	62 x 123 x 120 mm 2.5 x 4.9 x 4.8 inch

* The BatteryProtect is not designed for reverse currents from charging sources

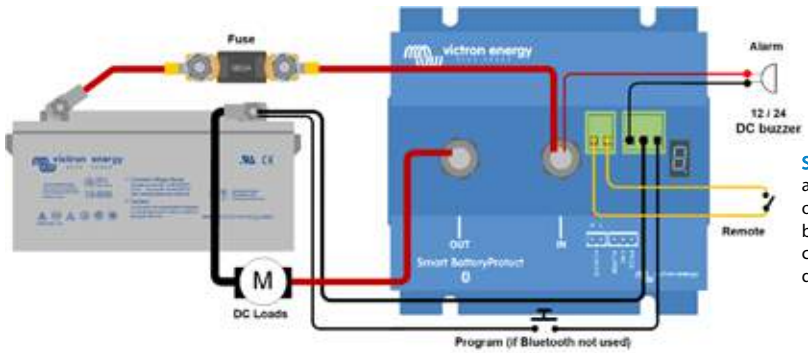

System on/off

a. ON when the L and H terminal are interconnected (switch or relay contact)
b. ON when the L terminal is pulled to battery minus (V< 3.5V)
c. ON when the H terminal is high (2.9V < VH < Vbat)
d. OFF in all other conditions

Cyrix-ct 12/24-120

Cyrix-ct 12/24-230

Control cable for
Cyrix-ct 12/24-230
Length: 1 m

Intelligent battery monitoring to prevent unwanted switching

Some battery combiners (also called voltage controlled relay, or split charge relay) will disconnect a battery in case of a short but high amperage load. A battery combiner also may fail to connect a large but discharged battery bank because the DC voltage immediately drops below the disengage value once the batteries are connected.
The software of the Cyrix-ct 12/24 does more than simply connect and disconnect based on battery voltage and with a fixed time delay. The Cyrix-ct 12/24 looks at the general trend (voltage increasing or decreasing) and reverses a previous action only if the trend has reversed during a certain period of time. The time delay depends on the voltage deviation from the trend.
(for Battery Combiners with multiple engage/disengage profiles, please see the Cyrix-i 400)

Long bolts to allow connection of more than one power cable

Cyrix 12/24-120: 13 mm (M6) Cyrix 12/24-230: 16 mm (M8)

Protection against overheating (due to a long duration overload e.g.)

The Cyrix will disengage in case of excessive contact temperature, and reengage again after it has cooled down.

LED status indication (Cyrix 12/24 230 only)

LED on: engaged LED 10 s flash: disengaged
LED 2 s flash: connecting LED 2 s blink: disconnecting
LED 0,25 s blink: alarm (over temperature; voltage > 16 V; both batteries < 10 V; one battery < 2 V)
(multiply by two for 24 V)

12/24 V auto ranging

The Cyrix-ct 12/24 automatically detects system voltage.

No voltage loss

Cyrix battery combiners are an excellent replacement for diode isolators. The main feature is that there is virtually no voltage loss so that the output voltage of alternators or battery chargers does not need to be increased.

Prioritising the starter battery

In a typical setup the alternator is directly connected to the starter battery. The accessory battery, and possibly also a bow thruster and other batteries are each connected to the starter battery with Cyrix battery combiners. When a Cyrix senses that the starter battery has reached the connect voltage it will engage, to allow for parallel charging of the other batteries.

Bidirectional voltage sensing and power supply from both batteries

The Cyrix senses the voltage of both connected batteries. It will therefore also engage if for example the accessory battery is being charged by a battery charger.
The Cyrix-ct 12/24 has a dual power supply. It will therefore also close if the voltage on one battery is too low to operate the Cyrix.
In order to prevent unexpected operation during installation or when one battery has been disconnected, the Cyrix-ct 12/24 will not close if the voltage on one of the two battery connections is lower than 2 V (12 V battery) or 4 V (24 V battery).

Parallel connection in case of emergency (Start Assist)

The Cyrix can also be engaged with a push button (Cyrix remains engaged during 30 seconds) or a switch to connect batteries in parallel manually.
This is especially useful in case of emergency when the starter battery is discharged or damaged.

Cyrix Battery Combiner	Cyrix-ct 12/24-120	Cyrix-ct 12/24-230
LED status indication	No	Yes
Continuous current	120 A	230 A
Cranking rating (5 seconds)	180 A	500 A
Connect voltage	From 13 V to 13,8 V and 26 to 27,6 V with intelligent trend detection	
Disconnect voltage	From 11 V to 12,8 V and 22 to 25,7 V with intelligent trend detection	
Current consumption when open	<4 mA	
Current consumption when closed	12 V : 220 mA 24 V : 120 mA	12 V : 320 mA 24 V : 180 mA
Start Assist	Yes (Cyrix remains engaged during 30 seconds)	
Control cable included (length 1 m)	No	Yes
Protection category	IP54	
Weight kg (lbs)	0,11 (0.24)	0,27 (0.6)
Dimensions h x w x d in mm (h x w x d in inches)	46 x 46 x 80 (1.8 x 1.8 x 3.2)	65 x 100 x 50 (2.6 x 4.0 x 2.0)

Connect (V)	Delay
V < 13 V	Remains open
13,0 V < V < 13,2 V	10 min
13,2 V < V < 13,4 V	5 min
13,4 V < V < 13,6 V	1 min
13,6 V < V < 13,8 V	4 sec

Disconnect (V)	Delay
V < 11 V	0 sec
11,0 V < V < 12,0 V	1 sec
12,0 V < V < 12,2 V	10 sec
12,2 V < V < 12,4 V	30 sec
12,4 V < V < 12,8 V	3 min
> 12,8 V	remains closed
> 16 V	over voltage disconnect

Approximate connect and disconnect delay
(multiply by two for a 24 V system)

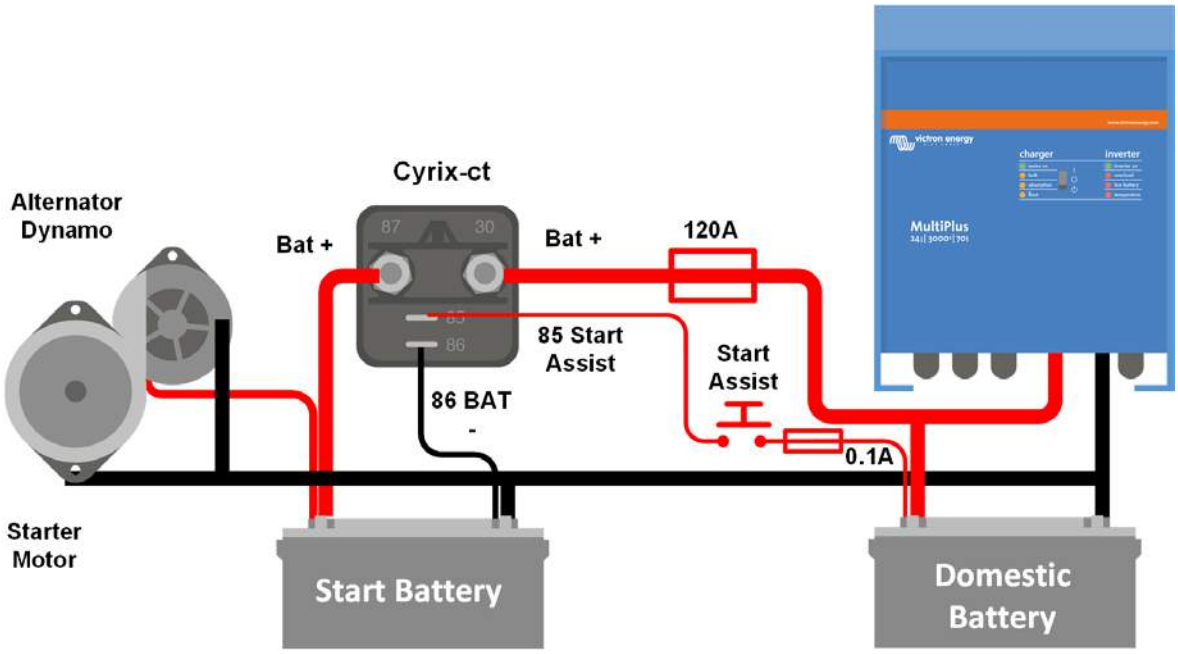

Cyrix-ct 12/24-120: connection diagram

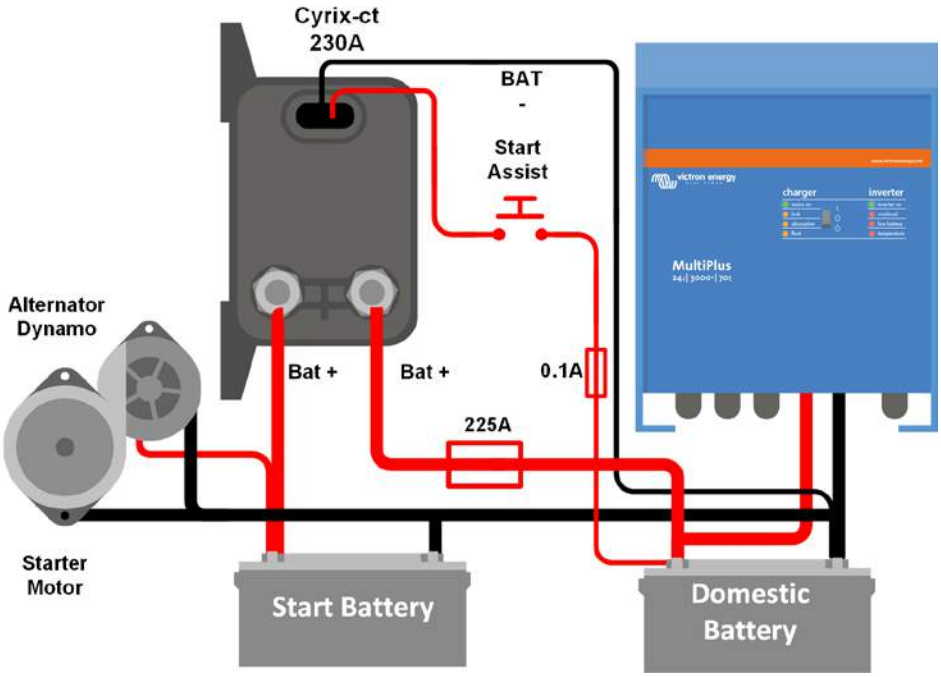

Cyrix-ct 12/24-230: connection diagram

Cyrix-i 400A 12/24V and 24/48V

Cyrix-i 24/48 V 400 A

New: intelligent battery monitoring to prevent unwanted switching

Some battery combiners will disconnect a battery in case of a short but high amperage load. A battery combiner also may fail to connect a large but discharged battery bank because the DC voltage immediately drops below the disengage value once the batteries are connected.
The software of the Cyrix-i does more than simply connect and disconnect based on battery voltage and with a fixed time delay. The Cyrix-i looks at the general trend (voltage increasing or decreasing) and reverses a previous action only if the trend has reversed during a certain period of time. The time delay depends on the voltage deviation from the trend.

In addition, four switch timing profiles can be chosen (see back page).

12/24 V and 24/48 V auto ranging

The Cyrix-i automatically detects system voltage.

No voltage loss

Cyrix battery combiners are an excellent replacement for diode isolators. The main feature is that there is virtually no voltage loss so that the output voltage of alternators or battery chargers does not need to be increased.

Prioritizing the starter battery

In a typical setup the alternator is directly connected to the starter battery. The accessory battery, and possibly also a bow thruster and other batteries are each connected to the starter battery with Cyrix battery combiners. When a Cyrix senses that the starter battery has reached the connect voltage it will engage, to allow for parallel charging of the other batteries.

Bidirectional voltage sensing and power supply from both batteries

The Cyrix senses the voltage of both connected batteries. It will therefore also engage if for example the accessory battery is being charged by a battery charger.
The Cyrix-i has a dual power supply. It will therefore also close if the voltage on one battery is too low to operate the Cyrix.
In order to prevent unexpected operation during installation or when one battery has been disconnected, the Cyrix-i will not close if the voltage on one of the two battery connections is lower than 2 V (12 V battery), or 4 V (24 V battery) or 8 V (48 V battery).

Parallel connection in case of emergency

The Cyrix can also be engaged with a push button (Cyrix remains engaged during 30 s) or a switch to connect batteries in parallel manually.
This is especially useful in case of emergency when the starter battery is discharged or damaged.

Model	Cyrix-i 12/24-400 Cyrix-i 24/48-400
Continuous current	400A
Peak current	2000A during 1 second
Input voltage 12/24 V model Input voltage 24/48 V model	8-36 VDC 16-72 VDC
Connect/disconnect profiles	See table
Over voltage disconnect	16 V / 32 / 64 V
Current consumption when open	4 mA
Emergency start	Yes, 30 s
Micro switch for remote monitoring	Yes
Status indication	Bicolour LED
Weight kg (lbs)	0,9 (2.0)
Dimensions h x w x d in mm (h x w x d in inches)	78 x 102 x 110 (3.1 x 4.0 x 4.4)

Profile 0			
Connect (V)*		Disconnect (V)*	
Less than 13 V	Remains open	More than 12,8 V	Remains closed
	Closes after		Opens after
13 V	10 min	12,8 V	10 min
13,2 V	5 min	12,4 V	5 min
13,4 V	3 min	12,2 V	1 min
13,6 V	1 min	12 V	4 sec
13,8 V	4 sec	Less than 11 V	Immediate

Profile 1			
Connect (V)*		Disconnect (V)*	
Less than 13,25 V	Remains open	More than 12,75 V	Remains closed
More than 13,25 V	Closes after 30 sec	From 10,5 V to 12,75 V	Opens after 2 min
		Less than 10,5 V	Immediate

Profile 2			
Connect (V)*		Disconnect (V)*	
Less than 13,2 V	Remains open	More than 12,8 V	Remains closed
More than 13,2 V	Closes after 6 sec	From 10,5 V to 12,8 V	Opens after 30 sec
		Less than 10,5 V	Immediate

Profile 3			
Connect (V)*		Disconnect (V)*	
Less than 13,25 V	Remains open	More than 13,5 V	Remains closed
	Closes after		Opens after
13 V	10 min	12,8 V	30 min
13,2 V	5 min	12,4 V	12 min
13,4 V	3 min	12,2 V	2 min
13,6 V	1 min	12 V	1 min
13,8 V	4 sec	Less than 10,5 V	Immediate

NOTES
1) After connecting 3 times, the minimum time to reconnect is 1 minute (to prevent 'rattling')
2) The Cyrix will not connect if the voltage on one of the battery connections is less than 2 V*. (to prevent unexpected switching during installation)
3) The Cyrix will always connect if the **start assist** is activated, as long as the voltage on one of the battery connections is sufficient to operate the Cyrix (approximately 10 V*)
* Multiply voltage x2 for 24 V systems and x4 for 48 V systems

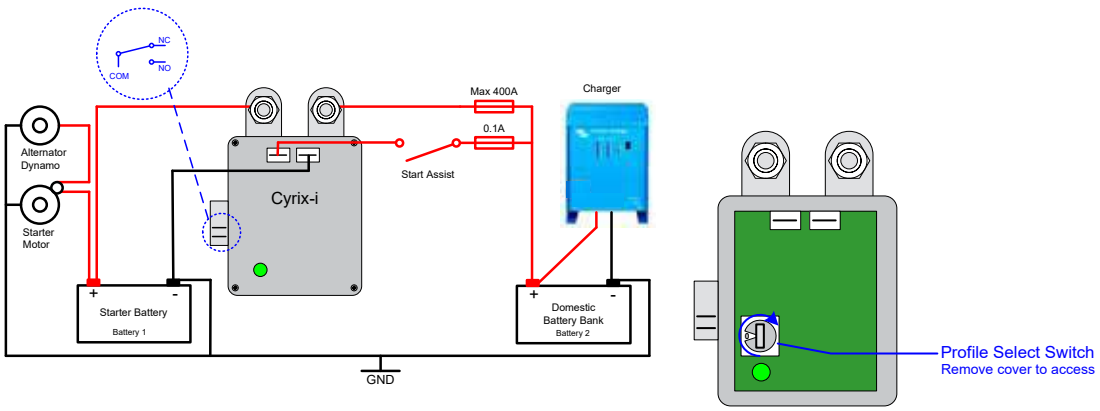

Cyrix-Li-load 12/24-230

Cyrix-Li-Charge 12/24-230

Cyrix-Li-ct 12/24-230

Control cable for Cyrix-ct 12/24-230
Length: 1 m

The LiFePO4 battery: preventing cell under voltage, overvoltage and over temperature

The first line of protection is cell balancing. All Victron LiFePO4 batteries have integrated cell balancing.
The second line of protection consists of:

- shut down of the load in case of imminent cell under voltage, and
- shut down or reduction of the charging current in case of imminent cell over voltage, high temperature (>50°C) or low temperature (<0°C).

The VE.Bus BMS is the core of the second protection line.
However, not all loads or chargers can be controlled directly by the VE.Bus BMS.
In order to shut down such loads or chargers several VE.Bus BMS controllable Cyrix switches are available.

Cyrix-Li-load

The Cyrix-Li-load will disengage when its control input becomes free floating.
If the battery voltage recovers after disconnection (which will happen when no other loads are connected to the battery), the output of the BMS will become high and the Cyrix will reengage after 30 seconds. After 3 attempts to reengage, the Cyrix will remain disengaged until battery voltage has increased to more than 13 V (resp. 26 V or 52 V) during at least 30 seconds (which is a sign that the battery is being recharged).
Alternatively, a BatteryProtect can be used (advantage: very low power consumption).

Cyrix-Li-Charge

The Cyrix-Li-Charge will connect a battery charger with 3 seconds delay:

- if the charge disconnect output of the VE.Bus BMS is high, and
- if it senses 13,7 V (resp. 27,4 V or 54,8 V) or more on its battery charger connection terminal, and
- if it senses 2 V or more on its battery terminal (the Cyrix will remain open if not connect to the battery).

The Cyrix-Li-Charge will disengage immediately whenever its control input becomes free floating, signalling cell over voltage or cell over temperature.
In general a cell over voltage alarm will reset shortly after charging has been stopped. The Cyrix will then reconnect the charger after a delay 3 seconds. After 2 attempts to reengage with 3 seconds delay, the delay increases to 10 minutes.
Whenever battery voltage is less than 13,5 V (resp. 27 V or 54 V), the Cyrix will disengage with a delay of 1 hour.
Note 1: In case of zero discharge current, or a small discharge current, the Cyrix will not disengage shortly after the charger has been switched off and/or disconnected, because battery voltage will remain higher than 13,5 V.
Note 2: If, after the Cyrix has disengaged, the output of the battery charger immediately increases to 13,7 V or more, the Cyrix will reengage, with 3 seconds delay.

Cyrix-Li-ct

The functionality of the Cyrix-Li-ct is analogous to the Cyrix-ct.
The Cyrix-Li-ct will parallel connect a lead acid starter battery and a LiFePO4 battery:

- if the charge disconnect output of the VE.Bus BMS is high, and
- if it senses 13,4 V (resp. 26,8 V) or more on one of its power terminals.

The Cyrix will disengage immediately:

- when its control output becomes free floating, signalling cell over voltage or cell over temperature, and/or
- when battery voltage drops below 13,2 V.

Start assist function: a short positive pulse will close the relay during 30 seconds (see figure on page 2).

A built-in transient voltage suppressor will limit the voltage spike that may occur when the Cyrix suddenly disengages due to cell overvoltage or over temperature.

LED status indication

LED on: engaged
LED 10 s flash: disengaged
LED 2 s flash: connecting
LED 2 s blink: disconnecting
LED 0,25 s blink: alarm (over temperature; voltage > 16 V; both batteries < 10 V; one battery < 2 V)
(multiply by two for 24 V)

Cyrix Battery Combiner	Cyrix-Li-load 12/24-230 Cyrix-Li-load 24/48-230	Cyrix-Li-Charge 12/24-230 Cyrix-Li-Charge 24/48-230	Cyrix-Li-ct 12/24-230	
			12 V system	24 V system
Continuous current and breaking capacity at 12 V or 24 V	230 A	230.A	230 A	
Breaking capacity at 48 V	80 A	80 A	n. a.	
LED status indication	Yes			
Control cable	Included (length 1 meter)			
Control input	The Cyrix engages when the control input is high (appr. Battery voltage) The Cyrix disengages when the control input is left free floating or pulled low			
Connect voltage	See text	13,7 V / 27,4 V / 54,8 V	13,4 V < V < 13,7 V: 120 s 13,7 V < V < 13,9 V: 30 s V > 13,9 V: 4 s	26,8 V < V < 27,4 V: 120 s 27,4 V < V < 27,8 V: 30 s V > 27,8 V: 4 s
Disconnect voltage	See text	See text	13,3 V < V < 13,2 V: 10 s V < 13,2 V: immediate	26,6 V < V < 26,4 V: 10 s V < 26,4 V: immediate
Current consumption when open	<4 mA			
Protection category	IP54			
Weight kg (lbs)	0,27 (0.6)			
Dimensions h x w x d in mm (h x w x d in inches)	65 x 100 x 50 (2.6 x 4.0 x 2.0)			

Cyrix-Li-load

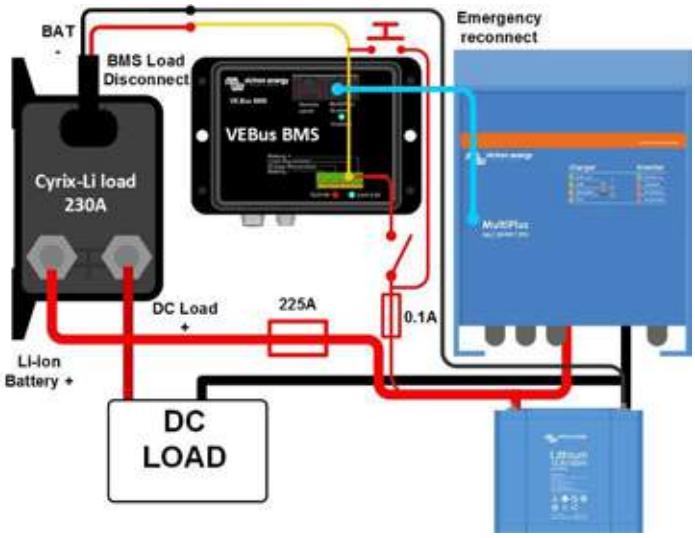

Cyrix-Li-Charge

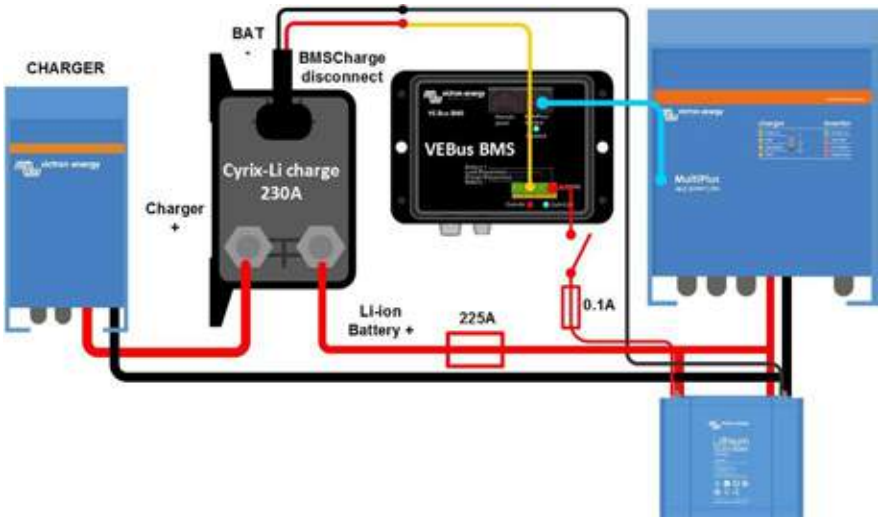

Cyrix-Li-ct

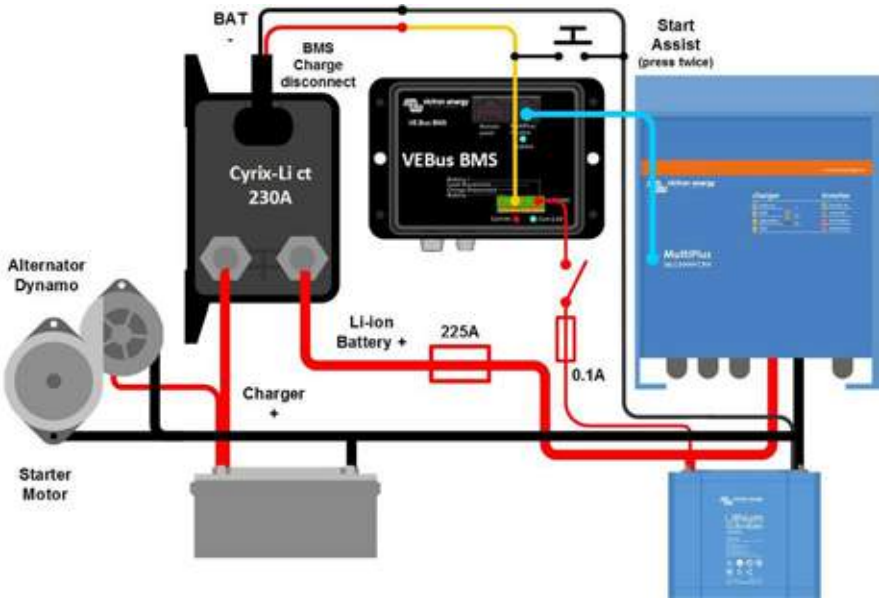

BMV-700 series: Precision battery monitoring

BMV-700

BMV bezel square

BMV shunt 500A/50mV
With quick connect pcb

BMV-702 Black

BMV-700H

Battery 'fuel gauge', time-to-go indicator, and much more

The remaining battery capacity depends on the ampere-hours consumed, discharge current, temperature and the age of the battery. Complex software algorithms are needed to take all these variables into account.

Next to the basic display options, such as voltage, current and ampere-hours consumed, the BMV-700 series also displays state of charge, time to go, and power consumption in Watts.

The BMV-702 features an additional input which can be programmed to measure the voltage (of a second battery), battery temperature or midpoint voltage (see below).

Bluetooth Smart

Use the Bluetooth Smart dongle to monitor your batteries on Apple or Android smartphones, tablets, macbooks and other devices.

Easy to install

All electrical connections are to the quick connect PCB on the current shunt. The shunt connects to the monitor with a standard RJ12 telephone cable. Included: RJ 12 cable (10 m) and battery cable with fuse (2 m); no other components needed.

Also included are a separate front bezel for a square or round display appearance, a securing ring for the rear mounting and screws for the front mounting.

Easy to program (with your smartphone!)

A quick install menu and a detailed setup menu with scrolling texts assist the user when going through the various settings.

Alternatively, choose the fast and easy solution: download the smartphone app (Bluetooth Smart dongle needed)

Midpoint voltage monitoring (BMV-702 only)

This feature, which is often used in industry to monitor large and expensive battery banks, is now for the first time made available at a low cost, to monitor any battery bank.

A battery bank consists of a string of series connected cells. The midpoint voltage is the voltage halfway along the string. Ideally, the midpoint voltage would be exactly half of the total voltage. In practice, however, deviations will be seen, that depend on many factors such as a different state of charge for new batteries or cells, different temperatures, internal leakage currents, capacities and much more.

Large or increasing deviation of the midpoint voltage, points to improper battery care or a failed battery or cell. Corrective action following a midpoint voltage alarm can prevent severe damage to an expensive battery. Please consult the BMV manual for more information.

Standard features

- Battery voltage, current, power, ampere-hours consumed and state of charge
- Remaining time at the current rate of discharge
- Programmable visual and audible alarm
- Programmable relay, to turn off non critical loads or to run a generator when needed
- 500 Amp quick connect shunt and connection kit
- Shunt selection capability up to 10.000 Amps
- VE.Direct communication port
- Stores a wide range of historical events**,** which can be used to evaluate usage patterns and battery health
- Wide input voltage range: 6,5 – 95V
- High current measurement resolution: 10 mA (0,01A)
- Low current consumption: 2,9Ah per month (4mA) @12V and 2,2Ah per month (3mA) @ 24V

BMV-702 additional features

Additional input to measure voltage (of a second battery), temperature or midpoint voltage, and corresponding alarm and relay settings.

BMV-700H: 60 to 385 VDC voltage range

No additional parts needed. Note: suitable for systems with grounded negative only (battery monitor is not isolated from shunt).

Other battery monitoring options

- Lynx Shunt VE.Can

More about midpoint voltage

One bad cell or one bad battery can destroy a large, expensive battery bank. When batteries are connected in series, a timely warning can be generated by measuring the midpoint voltage. Please see the BMV manual, section 5.2, for more information.
We recommend our **Battery Balancer** (BMS012201000) to maximize service life of series-connected batteries.

Battery Monitor	BMV-700	BMV-702 BMV-702 BLACK	BMV-700H
Supply voltage range	6,5 - 95 VDC	6,5 - 95 VDC	60 – 385 VDC
Current draw, back light off	< 4mA	< 4mA	< 4mA
Input voltage range, auxiliary battery	n. a.	6,5 - 95 VDC	n. a.
Battery capacity (Ah)	1 - 9999 Ah		
Operating temperature range	-40 +50°C (-40 - 120°F)		
Measures voltage of second battery, or temperature, or midpoint	No	Yes	No
Temperature measurement range	-20 +50°C		n. a.
VE.Direct communication port	Yes	Yes	Yes
Relay	60V / 1A normally open (function can be inverted)		
RESOLUTION & ACCURACY (with a 500 A shunt)			
Current	± 0,01A		
Voltage	± 0,01V		
Amp hours	± 0,1 Ah		
State of charge (0 – 100%)	± 0,1%		
Time to go	± 1 min		
Temperature (0 - 50°C or 30 - 120°F)	n. a.	± 1°C/°F	n. a.
Accuracy of current measurement	± 0,4%		
Accuracy of voltage measurement	± 0,3%		
INSTALLATION & DIMENSIONS			
Installation	Flush mount		
Front	63mm diameter		
Front bezel	69 x 69mm (2.7 x 2.7 inch)		
Body diameter and depth	52mm (2.0 inch) and 31mm (1.2 inch)		
Protection category	IP55 (not intended for outdoor use)		
STANDARDS			
Safety	EN 60335-1		
Emission / Immunity	EN 55014-1 / EN 55014-2		
Automotive	ECE R10-4 / EN 50498		
ACCESSORIES			
Shunt (included)	500A / 50mV		
Cables (included)	10 meter 6 core UTP with RJ12 connectors, and cable with fuse for '+' connection		
Temperature sensor	Optional (ASS000100000)		

1000A/50mV, 2000A/50mV and 6000A/50mV shunt
The quick connect PCB on the standard 500A/50mV shunt can also be mounted on these shunts.

Interface cables
- VE.Direct cables to connect a BMV 70x to the Color Control (ASS030530xxx)
- VE.Direct to USB interface (ASS030530000) to connect several BMV 70x to a Color Control GX or to a computer.

With the **VE.Direct to Bluetooth Smart dongle** real time data and alarms can be displayed on Apple and Android smartphones, tablets, macbooks and other devices.

Also use your smartphone to adjust settings!

(the VE.Direct to Bluetooth Smart dongle must be ordered separately)

See the VictronConnect BMV app Discovery Sheet for more screenshots

Color Control
The powerful Linux computer, hidden behind the colour display and buttons, collects data from all Victron equipment and shows it on the display. Besides communicating with Victron equipment, the Color Control communicates through CAN bus (NMEA2000), Ethernet and USB.
Data can be stored and analysed on the VRM Portal.

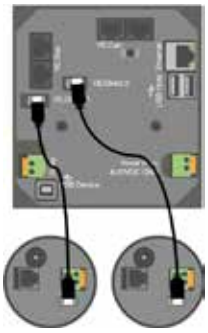

Temperature sensor

A maximum of four BMVs can be connected directly to a Color Control GX.
Even more BMVs can be connected to a USB Hub for central monitoring.

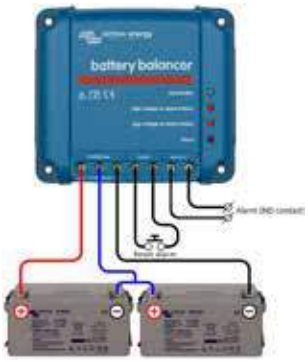

Battery Balancer (BMS012201000)
The Battery Balancer equalizes the state of charge of two series connected 12V batteries, or of several parallel strings of series connected batteries.
When the charge voltage of a 24V battery system increases to more than 27V, the Battery Balancer will turn on and compare the voltage over the two series connected batteries. The Battery Balancer will draw a current of up to 1A from the battery (or parallel connected batteries) with the highest voltage. The resulting charge current differential will ensure that all batteries will converge to the same state of charge.

If needed, several balancers can be paralleled.

A 48V battery bank can be balanced with three Battery Balancers.

BMV-712 Smart

BMV bezel square

BMV shunt 500A/50mV
With quick connect pcb

See the VictronConnect BMV app Discovery Sheet for more screenshots

Bluetooth inside

With Bluetooth built-in, the BMV Smart is ready for the Internet of Things (IoT) era. With Bluetooth being implemented in most other Victron Energy products, wireless communication between products will simplify system installation and enhance performance.

Download the Victron Bluetooth app

Use a smartphone or other Bluetooth enabled device to

- customize settings,
- monitor all important data on single screen,
- view historical data, and to
- update the software when new features become available.

Easy to install

All electrical connections are to the quick connect PCB on the current shunt. The shunt connects to the monitor with a standard RJ12 telephone cable. Included: RJ 12 cable (10 m) and battery cable with fuse (2 m); no other components needed.

Also included are a separate front bezel for a square or round display appearance, a securing ring for rear mounting and screws for front mounting.

Midpoint voltage monitoring

One bad cell or one bad battery can destroy a large, expensive battery bank. When batteries are connected in series, a timely warning can be generated by measuring the midpoint voltage. Please see the BMV manual, section 5.2, for more information.
We recommend our **Battery Balancer** (BMS012201000) to maximize service life of series-connected lead-acid batteries.

Very low current draw from the battery

Current consumption: 0,7Ah per month (1mA) @12V and 0,6Ah per month (0,8mA) @ 24V
Especially Li-ion batteries have virtually no capacity left when discharged until low voltage shutdown. After shutdown due to low cell voltage, the capacity reserve of a Li-ion battery is approximately 1Ah per 100Ah battery capacity. The battery will be damaged if the remaining capacity reserve is drawn from the battery. A residual current of 10mA for example may damage a 200Ah battery if the system is left in discharged state during more than 8 days.

Bi-stable alarm relay

Prevents increased current draw in case of an alarm.

Other features

- Battery voltage, current, power, ampere-hours consumed and state of charge
- Remaining time at the current rate of discharge
- Programmable visual and audible alarm
- Programmable relay, to turn off non critical loads or to run a generator when needed
- 500 Amp quick connect shunt and connection kit
- Shunt selection capability up to 10.000 Amps
- VE.Direct communication port
- Stores a wide range of historical events**,** which can be used to evaluate usage patterns and battery health
- Wide input voltage range: 6,5 – 70V
- High current measurement resolution: 10 mA (0,01A)
- Additional input to measure voltage (of a second battery), temperature or midpoint voltage, and corresponding alarm and relay settings

Battery Monitor	BMV-712 Smart
Supply voltage range	6,5 - 70 VDC
Current draw, back light off	< 1mA
Input voltage range, auxiliary battery	6,5 - 70 VDC
Battery capacity (Ah)	1 - 9999 Ah
Operating temperature range	-40 +50°C (-40 - 120°F)
Measures voltage of second battery, or temperature, or midpoint	Yes
Temperature measurement range	-20 +50°C
VE.Direct communication port	Yes
Bistable relay	60V / 1A normally open (function can be inverted)
RESOLUTION & ACCURACY (with a 500 A shunt)	
Current	± 0,01A
Voltage	± 0,01V
Amp hours	± 0,1 Ah
State of charge (0 – 100%)	± 0,1%
Time to go	± 1 min
Temperature (0 - 50°C or 30 - 120°F)	± 1°C/°F
Accuracy of current measurement	± 0,4%
Accuracy of voltage measurement	± 0,3%
INSTALLATION & DIMENSIONS	
Installation	Flush mount
Front	63mm diameter
Front bezel	69 x 69mm (2.7 x 2.7 inch)
Body diameter and depth	52mm (2.0 inch) and 31mm (1.2 inch)
Protection category	IP55 (not intended for outdoor use)
STANDARDS	
Safety	EN 60335-1
Emission / Immunity	EN 55014-1 / EN 55014-2
Automotive	ECE R10-4 / EN 50498
ACCESSORIES	
Shunt (included)	500A / 50mV
Cables (included)	10 meter 6 core UTP with RJ12 connectors, and cable with fuse for '+' connection
Temperature sensor	Optional (ASS000100000)

1000A/50mV, 2000A/50mV and 6000A/50mV shunt
The quick connect PCB on the standard 500A/50mV shunt can also be mounted on these shunts.

Interface cables
- VE.Direct cables to connect a BMV 712 to the Color Control (ASS030530xxx)
- VE.Direct to USB interface (ASS030530000) to connect several BMV 70x to a Color Control GX or to a computer.

Temperature sensor

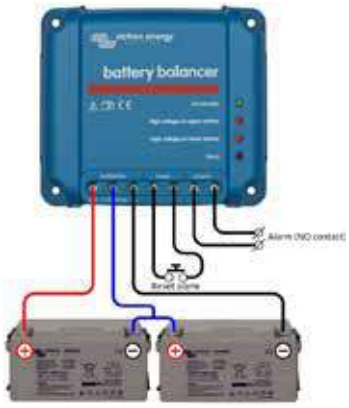

Battery Balancer (BMS012201000)
The Battery Balancer equalizes the state of charge of two series connected 12V batteries, or of several parallel strings of series connected batteries.
When the charge voltage of a 24V battery system increases to more than 27V, the Battery Balancer will turn on and compare the voltage over the two series connected batteries. The Battery Balancer will draw a current of up to 1A from the battery (or parallel connected batteries) with the highest voltage. The resulting charge current differential will ensure that all batteries will converge to the same state of charge.

If needed, several balancers can be paralleled.

A 48V battery bank can be balanced with three Battery Balancers.

Color Control
The powerful Linux computer, hidden behind the colour display and buttons, collects data from all Victron equipment and shows it on the display. Besides communicating with Victron equipment, the Color Control communicates through CAN bus (NMEA2000), Ethernet and USB.
Data can be stored and analysed on the VRM Portal.

A maximum of four BMVs can be connected directly to a Color Control GX.
Even more BMVs can be connected to a USB Hub for central monitoring.

Venus GX
The Venus GX provides intuitive control and monitoring. It has the same functionality as the Color Control GX, with a few extras:
- lower cost, mainly because it has no display or buttons
- 3 tank sender inputs
- 2 temperature inputs

Argo diode battery isolators

Argo Diode Isolator 120-2AC

Argo Diode Isolator 140-3AC

Diode battery isolators allow simultaneous charging of two or more batteries from one alternator, without connecting the batteries together. Discharging the accessory battery for example will not result in also discharging the starter battery.

The Argo Battery Isolators feature a low voltage drop thanks to the use of Schottky diodes: at low current the voltage drop is approximately 0,3 V and at the rated output approximately 0,45 V.
All models are fitted with a compensation diode that can be used to slightly increase the output voltage of the alternator. This compensates for the voltage drop over the diodes in the isolator.

Please see our book 'Energy Unlimited' or ask for specialist advice when installing a diode isolator. Simply inserting the isolator in the cabling between the alternator and the batteries will slightly reduce charge voltage. The result can be that batteries are not charged to the full 100% and age prematurely.

Alternator energize input

Some alternators need DC voltage on the B+ output to start charging. Obviously, DC will be present when the alternator is directly connected to a battery. Inserting a Diode or FET splitter will however prevent any return voltage/current from the batteries to the B+, and the alternator will not start.
The new 'AC' diode isolators feature a special current limited energize input that will power the B+ when the engine run/stop switch is closed.

Argo Diode Battery Isolator	80-2SC	80-2AC	100-3AC	120-2AC	140-3AC	160-2AC	180-3AC
Maximum charge current (A)	80	80	100	120	140	160	180
Maximum alternator current (A)	80	80	100	120	140	160	180
Number of batteries	2	2	3	2	3	2	3
Alternator Energize Input	no	yes	yes	yes	yes	yes	yes
Connection	M6 Studs	M6 Studs	M6 Studs	M8 Studs	M8 Studs	M8 Studs	M8 Studs
Compensation diode and Energize connection	6,3 mm Faston	6,3 mm Faston	6,3 mm Faston	6,3 mm Faston	6,3 mm Faston	6,3 mm Faston	6,3 mm Faston
Weight kg (lbs)	0,5 (1.3)	0,6 (1.3)	0,8 (1.8)	0,8 (1.8)	1,1 (2.5)	1,1 (2.5)	1,5 (3.3)
Dimensions h x w x d in mm (h x w x d in inches)	60 x 120 x 75 (2.4 x 4.7 x 3.0)	60 x 120 x 90 (2.4 x 4.7 x 3.9)	60 x 120 x 115 (2.4 x 4.7 x 4.5)	60 x 120 x 115 (2.4 x 4.7 x 4.5)	60 x 120 x 150 (2.4 x 4.7 x 5.9)	60 x 120 x 150 (2.4 x 4.7 x 5.9)	60 x 120 x 200 (2.4 x 4.7 x 7.9)

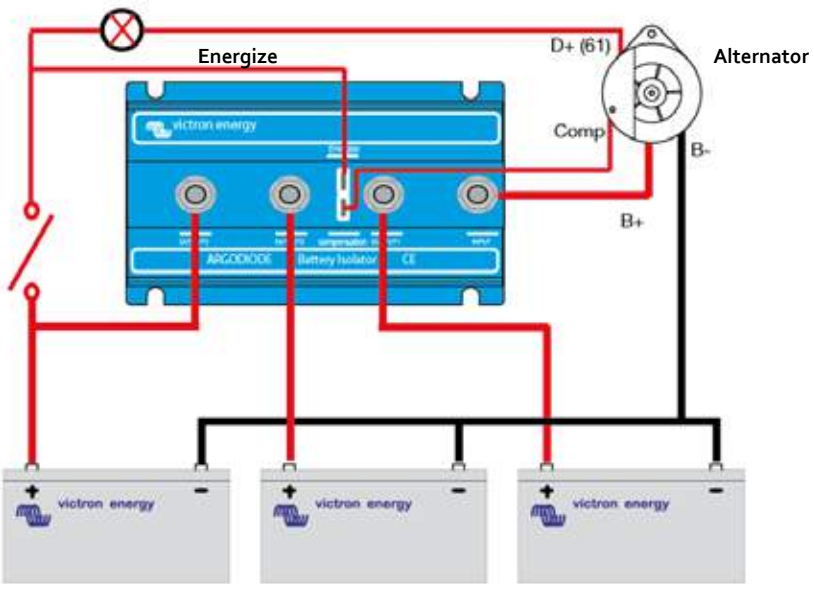

Argo FET 100-3
3bat 100A

Similarly to Diode Battery Isolators, FET Isolators allow simultaneous charging of two or more batteries from one alternator (or a single output battery charger), without connecting the batteries together. Discharging the accessory battery for example will not result in also discharging the starter battery.

In contrast with Diode Battery Isolators, FET Isolators have virtually no voltage loss. Voltage drop is less than 0,02 Volt at low current and averages 0,1 Volt at higher currents.

When using Argo FET Battery Isolators, there is no need to also increase the output voltage of the alternator. However, care should be taken to keep cable lengths short and of sufficient cross section.

Example:
When a current of 100 A flows through a cable of 50 mm^2 cross section (AWG 0) and 10 m length (30 ft), the voltage drop over the cable will be 0,26 Volt. Similarly a current of 50 A through a cable of 10 mm^2 cross section (AWG 7) and 5 m length (15 ft) will result in a voltage drop of 0,35 Volt!

Alternator energize input

Some alternators need DC voltage on the B+ output to start charging. Obviously, DC will be present when the alternator is directly connected to a battery. Inserting a Diode or FET splitter will however prevent any return voltage/current from the batteries to the B+, and the alternator will not start.
The new Argo FET Isolators have a special current limited energize input that will power the B+ when the engine run/stop switch is closed.

Argo FET 100-3
3bat 100A

Argo FET Battery Isolator	Argo FET 100-2	Argo FET 100-3	Argo FET 200-2	Argo FET 200-3
Maximum charge current (A)	100	100	200	200
Maximum alternator current (A)	100	100	200	200
Number of batteries	2	3	2	3
Connection	M8 bolts	M8 bolts	M8 bolts	M8 bolts
Weight kg (lbs)	1,4 (3.1)	1,4 (3.1)	1,4 (3.1)	1,4 (3.1)
Dimensions: h x w x d in mm (h x w x d in inches)	65 x 120 x 200 (2.6 x 4.7 x 7.9)	65 x 120 x 200 (2.6 x 4.7 x 7.9)	65 x 120 x 200 (2.6 x 4.7 x 7.9)	65 x 120 x 200 (2.6 x 4.7 x 7.9)

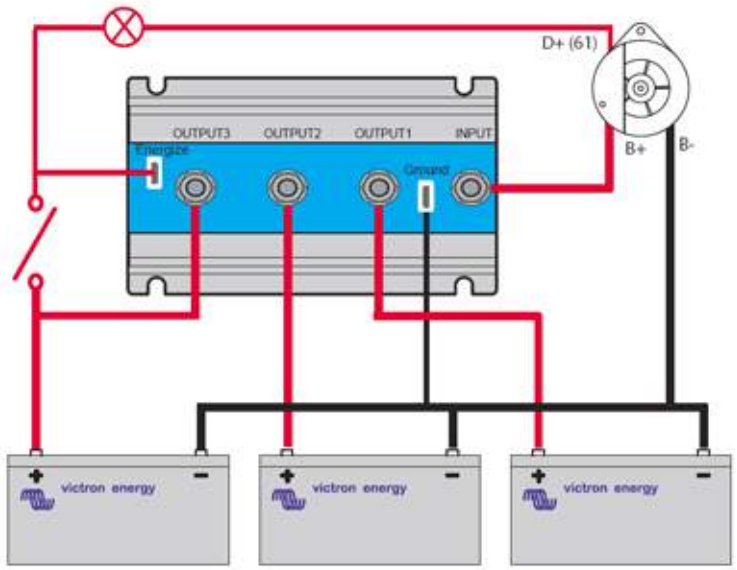

The problem: the service life of an expensive battery bank can be substantially shortened due to state of charge unbalance

One battery with a slightly higher internal leakage current in a 24V or 48V bank of several series/parallel connected batteries will cause undercharge of that battery and parallel connected batteries, and overcharge of the series connected batteries. Moreover, when new cells or batteries are connected in series, they should all have the same initial state of charge. Small differences will be ironed out during absorption or equalize charging, but large differences will result in damage due to excessive gassing (caused by overcharging) of the batteries with the higher initial state of charge and sulphation (caused by undercharging) of the batteries with the lower initial state of charge.

The Solution: battery balancing

The Battery Balancer equalizes the state of charge of two series connected 12V batteries, or of several parallel strings of series connected batteries.
When the charge voltage of a 24V battery system increases to more than 27,3V, the Battery Balancer will turn on and compare the voltage over the two series connected batteries. The Battery Balancer will draw a current of up to 0,7A from the battery (or parallel connected batteries) with the highest voltage. The resulting charge current differential will ensure that all batteries will converge to the same state of charge.

If needed, several balancers can be paralleled.
A 48V battery bank can be balanced with three Battery Balancers.

LED indicators

Green: on (battery voltage > 27,3V)
Orange: lower battery leg active (deviation > 0,1V)
Orange: upper battery leg active (deviation > 0,1V)
Red: alarm (deviation > 0,2V). Remains on until the deviation has reduced to less than 0,14V, or until system voltage drops to less than 26,6V.

Alarm relay

Normally open. The alarm relay closes when the red LED switches on and opens when the red LED switches off.

Alarm reset

Two terminals are available to connect a push button. Interconnecting the two terminals resets the relay.
The reset condition will remain active until the alarm is over. Thereafter the relay will close again when a new alarm occurs.

Even more insight and control with the midpoint monitoring function of the BMV-702 Battery Monitor

The BMV-702 measures the midpoint of a string of cells or batteries. It displays the deviation from the ideal midpoint in volts or percent. Separate deviation percentages can be set to trigger a visual/audible alarm and to close a potential free relay contact for remote alarm purposes.
Please see the manual of the BMV-702 for more information about battery balancing.

Learn more about batteries and battery charging

To learn more about batteries and charging batteries, please refer to our book 'Energy Unlimited' (available free of charge from Victron Energy and downloadable from www.victronenergy.com).

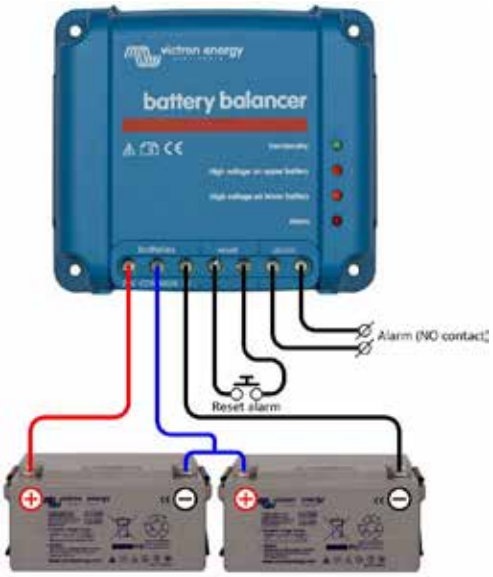

Battery Balancer connected to two series connected 12V batteries (24V system)

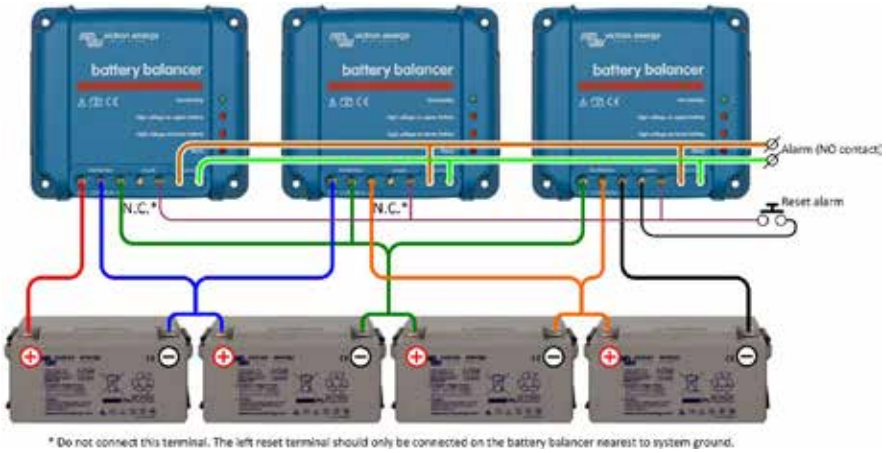

Three Battery Balancers connected to four series connected 12V batteries (48V system)

Victron Battery Balancer	
Input voltage range	Up to 18V per battery, 36V total
Turn on level	27,3V +/- 1%
Turn off level	26,6V +/- 1%
Current draw when off	0,7 mA
Midpoint deviation to start balancing	50 mV
Maximum balancing current	0,7A (when deviation > 100 mV)
Alarm trigger level	200 mV
Alarm reset level	140 mV
Alarm relay	60V / 1A normally open
Alarm relay reset	Two terminals to connect a push button
Over temperature protection	yes
Operating temperature	-30 to +50°C
Humidity (non-condensing)	95%
ENCLOSURE	
Colour	Blue (RAL 5012)
Connection terminals	Screw terminals 6 mm² / AWG10
Protection category	IP22
Weight	0,4 kg
Dimensions (h x w x d)	100 x 113 x 47 mm
STANDARDS	
Safety	EN 60950, CSA/UL 62368-1
Emission	EN 61000-6-3, EN 55014-1
Immunity	EN 61000-6-2, EN 61000-6-1, EN 55014-2
Automotive Directive	EN 50498

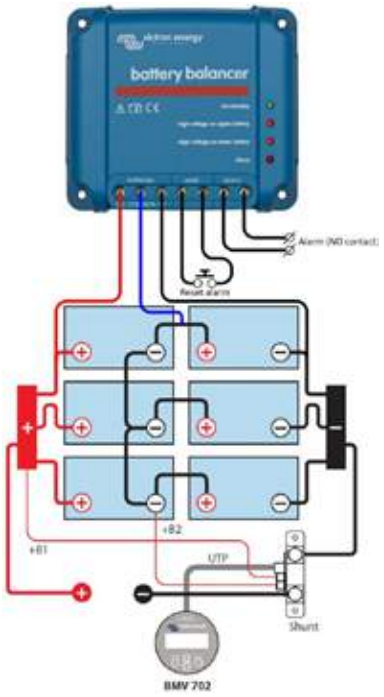

Battery Balancer connected to six series-parallel connected 12V batteries (24V system)

Installation

1) The Battery Balancer(s) must be installed on a well-ventilated vertical surface close to the batteries (but, due to possible corrosive gasses, not above the batteries!)
2) **In case of series-parallel connection, the midpoint interconnecting cables must be sized to at least carry the current that arises when one battery becomes open-circuited.**
   - In case of 2 parallel strings: cross section 50% of the series interconnecting cables.
   - In case of 3 parallel strings: cross section 33% of the series interconnecting cables, etc.
3) If required: first wire the alarm contact and the alarm reset.
4) Use at least 0,75 mm² to wire the negative, positive and midpoint connections (in this order). Additionally, if in your application it is needed to comply with UL, also fuse these wires near the batteries with a 10A fuse suitable for DC current (e.g. Littelfuse ATOF series automotive blade fuse in combination with an inline fuse holder).
5) The balancer is operational.
   When the voltage over a string of two batteries is less than 26,6V the balancer switches to standby and all LEDs will be off.
   When the voltage over a string of two batteries increases to more than 27,3V (during charging) the green LED will turn on, indicating that the balancer is on.
   When on, a voltage deviation of more than 50 mV will start the balancing process and at 100 mV one of the two orange LEDs will turn on. A deviation of more than 200 mV will trigger the alarm relay.

What to do in case of an alarm during charging

In case of a new battery bank the alarm is probably due to differences in initial state-of-charge. If the difference between the lowest and highest battery voltage reading is more than 0,9V: stop charging and charge the individual batteries or cells separately first, or reduce charge current substantially and allow the batteries to equalize over time.

If the problem persists after several charge-discharge cycles:

a) In case of series-parallel connection disconnect the midpoint parallel connection wiring and measure the individual midpoint voltages during absorption charge to isolate batteries or cells which need additional charging, or:
b) Charge and then test all batteries or cells individually or:
c) Connect two or more battery balancers in parallel (on average one balancer will take care of up to three parallel 200 Ah strings).

In case of an older battery bank which has performed well in the past, the problem may be due to:

d) Systematic undercharge: more frequent charging needed (VRLA batteries), or equalization charge needed (flooded deep cycle flat plate or OPzS batteries). Better and regular charging will solve the problem.
e) One or more faulty cells: replace all batteries.

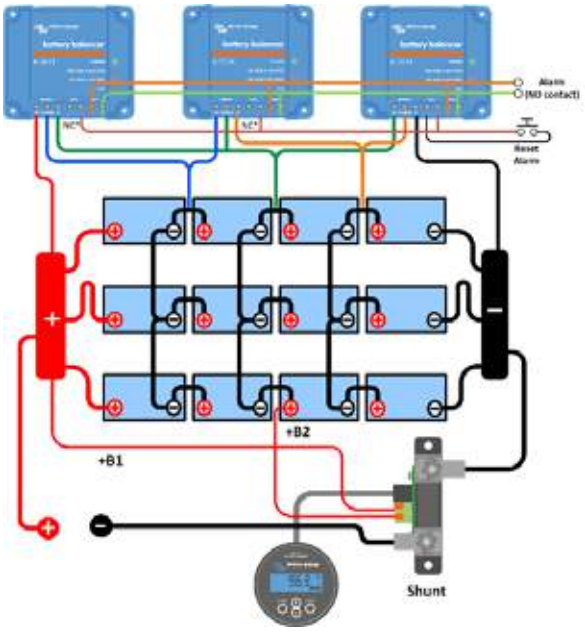

Three Battery Balancers connected to 12 series-parallel connected 12V batteries (48V system)

12,8V 300Ah LiFePO4 Battery

Li-ion app

Why lithium-iron-phosphate?

Lithium-iron-phosphate (LiFePO4 or LFP) is the safest of the mainstream li-ion battery types. The nominal voltage of a LFP cell is 3,2V (lead-acid: 2V/cell). A 12,8V LFP battery therefore consists of 4 cells connected in series; and a 25,6V battery consists of 8 cells connected in series.

Rugged

A lead-acid battery will fail prematurely due to sulfation:

- If it operates in deficit mode during long periods of time (i.e. if the battery is rarely, or never at all, fully charged).
- If it is left partially charged or worse, fully discharged (yacht or mobile home during wintertime).

A LFP battery does not need to be fully charged. Service life even slightly improves in case of partial charge instead of a full charge. This is a major advantage of LFP compared to lead-acid.
Other advantages are the wide operating temperature range, excellent cycling performance, low internal resistance and high efficiency (see below).

LFP is therefore the chemistry of choice for demanding applications.

Efficient

In several applications (especially off-grid solar and/or wind), energy efficiency can be of crucial importance.
The round-trip energy efficiency (discharge from 100% to 0% and back to 100% charged) of the average lead-acid battery is 80%.
The round-trip energy efficiency of a LFP battery is 92%.
The charge process of lead-acid batteries becomes particularly inefficient when the 80% state of charge has been reached, resulting in efficiencies of 50% or even less in solar systems where several days of reserve energy is required (battery operating in 70% to 100% charged state).
In contrast, a LFP battery will still achieve 90% efficiency under shallow discharge conditions.

Size and weight

Saves up to 70% in space
Saves up to 70% in weight

Expensive?

LFP batteries are expensive when compared to lead-acid. But in demanding applications, the high initial cost will be more than compensated by longer service life, superior reliability and excellent efficiency.

Bluetooth

With Bluetooth cell voltages, temperature and alarm status can be monitored.
Very useful to localize a (potential) problem, such as cell imbalance.

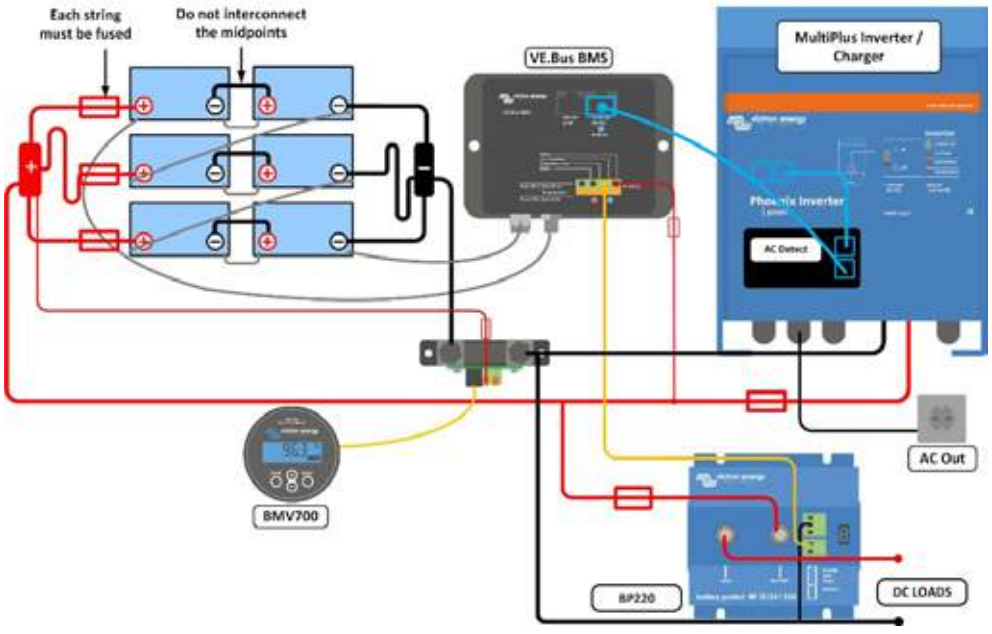

Our LFP batteries have integrated cell balancing and cell monitoring. Up to 5 batteries can be paralleled and up to four 12V batteries or two 24V batteries can be series connected, so that a 48V battery bank of up to 1500Ah can be assembled. The cell balancing/monitoring cables can be daisy-chained and must be connected to a Battery Management System (BMS).

Battery Management System (BMS)

The BMS will:

1. Generate a pre-alarm whenever the voltage of a battery cell decreases to less than 3,1V (adjustable 2,85-3,15V).
2. Disconnect or shut down the load whenever the voltage of a battery cell decreases to less than 2,8V (adjustable 2,6V-2,8V).
3. Stop the charging process whenever the voltage of a battery cell increases to more than 4,2V.
4. Shut down the system whenever the temperature of a cell exceeds 50°C.

See the BMS datasheets for more features

Battery specification

VOLTAGE AND CAPACITY	LFP-Smart 12,8/60	LFP-Smart 12,8/100	LFP-Smart 12,8/150	LFP-Smart 12,8/160-a	LFP-Smart 12,8/200-a	LFP-Smart 12,8/300	LFP-Smart 25,6/200
Nominal voltage	12,8V	12,8V	12,8V	12,8V	12,8V	12,8V	25,6V
Nominal capacity @ 25°C*	60Ah	100Ah	150Ah	160Ah	200Ah	300Ah	200Ah
Nominal capacity @ 0°C*	48Ah	80Ah	125Ah	130Ah	160Ah	240Ah	160Ah
Nominal capacity @ -20°C*	30Ah	50Ah	75Ah	80Ah	100Ah	150Ah	100Ah
Nominal energy @ 25°C*	768Wh	1280Wh	1920Wh	2048Wh	2560Wh	3840Wh	5120Wh
*Discharge current ≤1C							
CYCLE LIFE (capacity ≥ 80% of nominal)							
80% DoD	2500 cycles						
70% DoD	3000 cycles						
50% DoD	5000 cycles						
DISCHARGE							
Maximum continuous discharge current	120A	200A	300A	320A	400A	600A	400A
Recommended continuous discharge current	≤60A	≤100A	≤150A	≤160A	≤200A	≤300A	≤200A
End of discharge voltage	11,2V	11,2V	11,2V	11,2V	11,2V	11,2V	22,4V
OPERATING CONDITIONS							
Operating temperature	Discharge: -20°C to +50°C Charge: +5°C to +50°C						
Storage temperature	-45°C to +70°C						
Humidity (non-condensing)	Max. 95%						
Protection class	IP 22						
CHARGE							
Charge voltage	Between 14V/28V and 14,4V/28,8V (14,2V/28,4V recommended)						
Float voltage	13,5V/27V						
Maximum charge current	120A	200A	300A	320A	400A	600A	400A
Recommended charge current	≤30A	≤50A	≤75A	≤80A	≤100A	≤150A	≤100A
OTHER							
Max storage time @ 25°C*	1 year						
BMS connection	Male + female cable with M8 circular connector, length 50cm						
Power connection (threaded inserts)	M8	M8	M8	M10	M10	M10	M8
Dimensions (hxwxd) mm	240 x 285 x132	197 x 321 x 152	237 x 321 x 152	237 x 321 x 152	237 x 321 x 152	347 x 425 x 274	317 x 631 x 208
Weight	12kg	15kg	20kg	20kg	22kg	51kg	56kg
*When fully charged							

VE.Bus BMS

Protects each individual cell of a Victron lithium iron phosphate ($LiFePO_4$ or LFP) battery

Each individual cell of a $LiFePO_4$ battery must be protected against over voltage, under voltage and over temperature. Victron LiFePO4 batteries have integrated Balancing, Temperature and Voltage control (acronym: BTV) and connect to the VE.Bus BMS with two M8 circular connector cord sets.
The BTVs of several batteries can be daisy chained. Up to five batteries can be paralleled and up to four batteries can be series connected (BTVs are simply daisy-chained) so that a 48V battery bank of up to 1500Ah can be assembled. Please see our LiFePO4 battery documentation for details.
The BMS will:

- shut down or disconnect loads in case of imminent cell under voltage,
- reduce charge current in case of imminent cell overvoltage or over temperature (VE.Bus products only, see below), and
- shut down or disconnect battery chargers in case of imminent cell overvoltage or over temperature.

Protects 12V, 24V and 48V systems

The operating voltage range of the BMS: 9 to 70V DC.

Communicates with all VE.Bus products

The VE.Bus BMS connects to a MultiPlus, Quattro or Phoenix inverter with a standard RJ45 UTP cable.

Other products, without VE.Bus, can be controlled as shown below:

Load Disconnect

The Load Disconnect output is normally high and becomes free floating in case of imminent cell under voltage (default 3,1V/cell, adjustable on the battery between 2,85V and 3,15V per cell).
Maximum current: 2A.
The Load Disconnect output can be used to control

- the remote on/off of a load, and/or
- the remote on/off of an electronic load switch (Battery Protect)

Pre-alarm

The pre-alarm output is normally free floating and becomes high in case of imminent cell under voltage (default 3,1V/cell, adjustable on the battery between 2,85V and 3,15V per cell).
Maximum current: 1A (not short circuit protected).
The minimum delay between pre-alarm and load disconnect is 30 seconds.

Charge Disconnect

The Charge Disconnect output is normally high and becomes free floating in case of imminent cell over voltage or over temperature. Maximum current: 10mA.
The Charge Disconnect output can be used to control

- the remote on/off of a charger and/or
- a Cyrix-Li-Charge relay and/or
- a Cyrix-Li-ct Battery Combiner

LED indicators

- **Enabled (blue):** VE.Bus products are enabled.
- **Cell>4V or temperature (red):** charge disconnect output low because of imminent cell over voltage or over temperature.
- **Cell>2,8V (blue):** load disconnect output high.

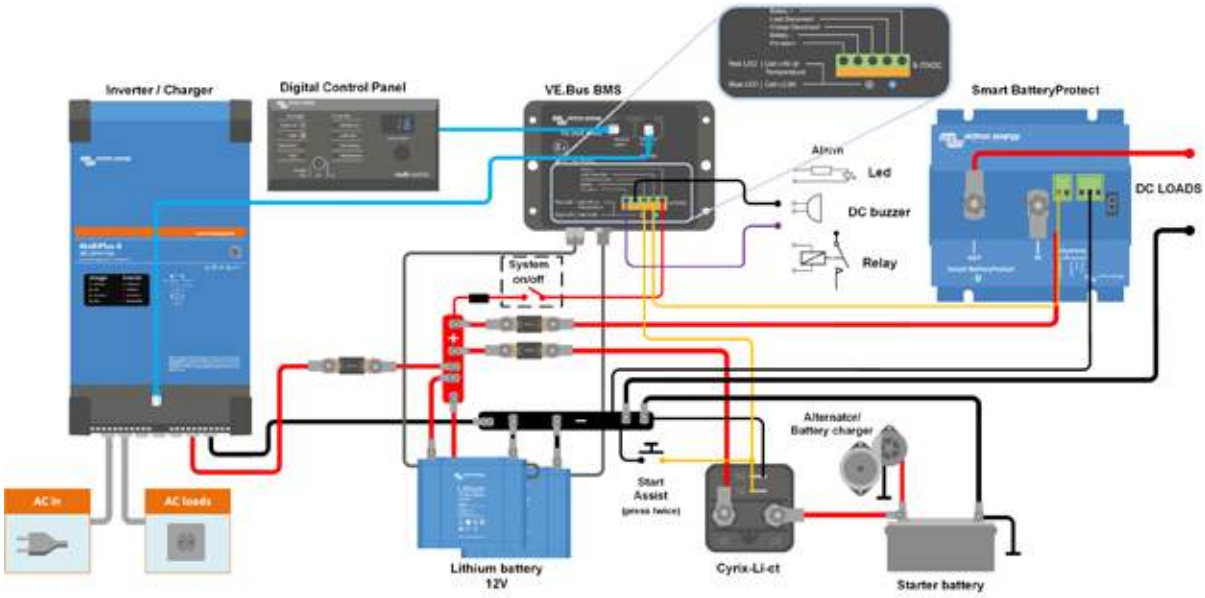

Figure 1: Application example for a vehicle or boat.
A Cyrix Li-ion Battery Combiner is used to connect to the starter battery and alternator.
The UTP cable to the inverter/charger also provides the minus connection to the BMS.

VE.Bus BMS	
Input voltage range	9 – 70V DC
Current draw, normal operation	10 mA (excluding Load Disconnect current)
Current draw, low cell voltage	2mA
Load Disconnect output	Normally high Source current limit: 2A Sink current: 0 A (output free floating)
Charge Disconnect output	Normally high Source current limit: 10mA Sink current: 0 A (output free floating)
Pre-alarm output	Normally free floating High (Vbat) in case of alarm, max. 1A (not short circuit proof)
GENERAL	
VE.Bus communication port	Two RJ45 sockets to connect to all VE.Bus products
Operating temperature	-20 to +50°C 0 - 120°F
Humidity	Max. 95% (non-condensing)
Protection grade	IP20
ENCLOSURE	
Material and colour	ABS, matt black
Weight	0,1kg
Dimensions (h x w x d)	105 x 78 x 32mm
STANDARDS	
Standards: Safety Emission Immunity Automotive	EN 60950 EN 61000-6-3, EN 55014-1 EN 61000-6-2, EN 61000-6-1, EN 55014-2 Regulation UN/ECE-R10 Rev.4

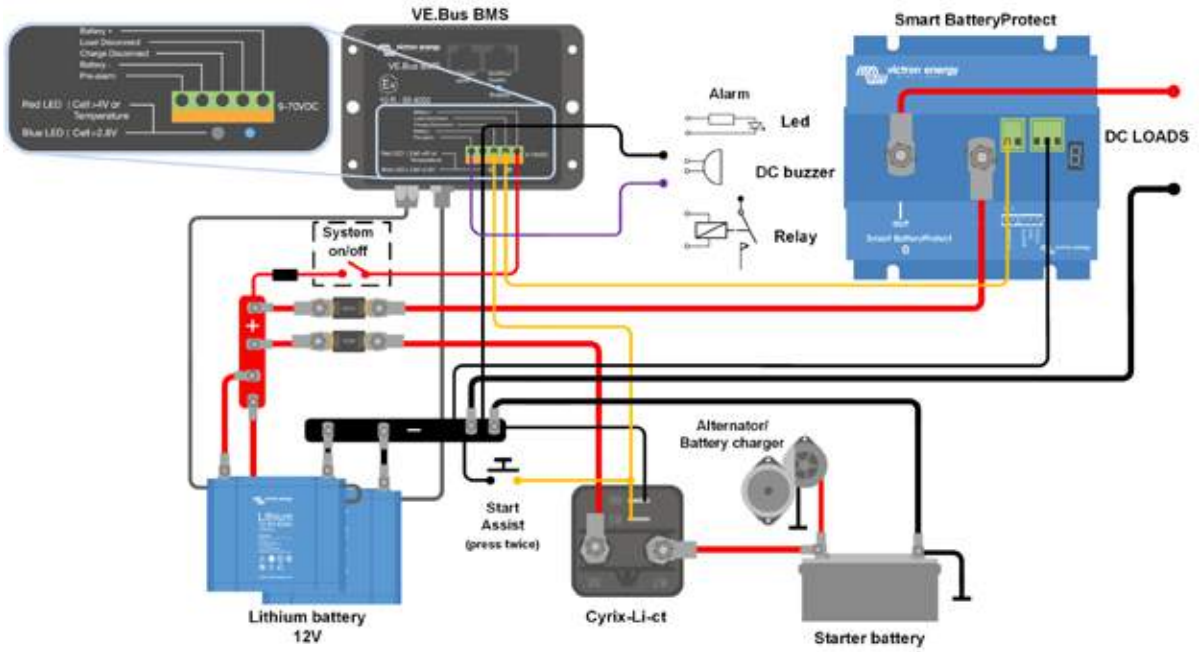

Figure 2: Application example for a vehicle or boat, without inverter/charger.

Cyrix Combiners especially designed for use with the VE.Bus BMS:

Cyrix-Li-ct (120A or 230A)

Is a battery combiner with a Li-ion adapted engage/disengage profile and a control terminal to connect to the Charge Disconnect of the BMS.

Cyrix-Li-Charge (120A or 230A)

Is a unidirectional combiner to insert in between a battery charger and the LFP battery. It will engage only when charge voltage from a battery charger is present on its charge-side terminal. A control terminal connects to the Charge Disconnect of the BMS.

12,8V 90Ah LiFePO4 Battery

12,8V 60Ah LiFePO4 Battery

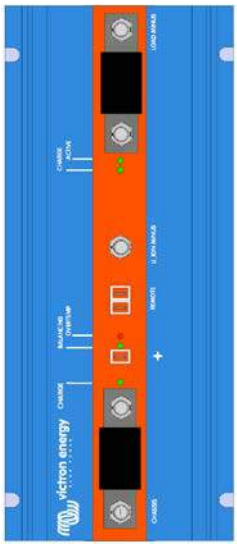

BMS 12/200 with:
- **12V 200A load output, short-circuit proof**
- **Li-ion battery over-discharge protection**
- **starter battery discharge protection**
- **adjustable alternator current limit**
- **remote on-off switch**

Why lithium-iron-phosphate?

Lithium-iron-phosphate (LiFePO4 or LFP) is the safest of the mainstream li-ion battery types. The nominal voltage of a LFP cell is 3,2V (lead-acid: 2V / cell). A 12,8V LFP battery therefore consists of 4 cells connected in series; and a 25,6 V battery consists of 8 cells connected in series.

Why a Battery Management System (BMS) is needed:

1. A LFP cell will be damaged if the voltage over the cell falls to less than 2,5V.
2. A LFP cell will be damaged if the voltage over the cell increases to more than 4,2V.

Lead-acid batteries will eventually also be damaged when discharged too deeply or overcharged, but not immediately. A lead-acid battery will recover from total discharge even after it has been left in discharged state during days or weeks (depending on battery type and brand).

3. The cells of a LFP battery do not auto-balance at the end of the charge cycle.

The cells in a battery are not 100% identical. Therefore, when cycled, some cells will be fully charged or discharged earlier than others. The differences will increase if the cells are not balanced/equalized from time to time.
In a lead-acid battery a small current will continue to flow even after one or more cells are fully charged (the main effect of this current is decomposition of water into hydrogen and oxygen). This current helps to fully charge other cells that are lagging behind, thus equalizing the charge state of all cells.
The current which flows through a fully-charged LFP cell however, is nearly zero, and lagging cells will therefore not be fully charged. Over time the differences between cells may become so extreme that, even though the overall battery voltage is within limits, some cells will be destroyed due to over- or under voltage.

A LFP battery therefore must be protected by a BMS that actively balances the individual cells and prevents under- and over-voltage.

Rugged

A lead-acid battery will fail prematurely due to sulfation:

- If it operates in deficit mode during long periods of time (the battery is rarely, or never at all, fully charged).
- If it is left partially charged or worse, fully discharged (yacht or mobile home during winter time).

A LFP battery does not need to be fully charged. Service life even slightly improves in case of partial charge instead of a full charge. This is a major advantage of LFP compared to lead-acid.
Other advantages are the wide operating temperature range, excellent cycling performance, low internal resistance and high efficiency (see below).

LFP is therefore the chemistry of choice for very demanding applications.

Efficient

In several applications (especially off-grid solar and/or wind), energy efficiency can be of crucial importance.
The round trip energy efficiency (discharge from 100% to 0% and back to 100% charged) of the average lead-acid battery is 80%.
The round trip energy efficiency of a LFP battery is 92%.
The charge process of lead-acid batteries becomes particularly inefficient when the 80% state of charge has been reached, resulting in efficiencies of 50% or even less in solar systems where several days of reserve energy is required (battery operating in 70% to 100% charged state).
In contrast, a LFP battery will still achieve 90% efficiency under shallow discharge conditions.

Size and weight

Saves up to 70% in space
Saves up to 70% in weight

Expensive?

LFP batteries are expensive when compared to lead-acid. But in demanding applications, the high initial cost will be more than compensated by longer service life, superior reliability and excellent efficiency.

Endless flexibility

LFP batteries are easier to charge than lead-acid batteries. The charge voltage may vary from 14V to 16V (as long as no cell is subjected to more than 4,2V), and they do not need to be fully charged.
Several batteries can be connected in parallel and no damage will occur if some batteries are less charged than others.
Our 12V BMS will support up to 10 batteries in parallel (BTVs are simply daisy-chained).

A 12V BMS that protects the alternator (and wiring), and supplies up to 200A in any DC load (including inverters and inverter/chargers)

Alternator/battery charger input (Power Port AB)

1. The first function of Power Port AB is to prevent the load connected to the LFP battery from discharging the starter battery. This function is similar to that of a Cyrix Battery Combiner or Argo FET Battery Isolator. Current can flow to the LFP battery only if the input voltage (= voltage on the starter battery) exceeds 13V.
2. Current cannot flow back from the LFP battery to the starter battery, thus preventing eventual damage to the LFP battery due to excessive discharge.
3. Excessive input voltage and transients are regulated down to a safe level.
4. Charge current is reduced to a safe level in case of cell unbalance or over temperature.
5. The input current is electronically limited to approximately 80% of the AB fuse rating. A 50A fuse, for example, will therefore limit the input current to 40A. Choosing the right fuse will therefore:
   a. Protect the LFP battery against excessive charge current (important in case of a low capacity LFP battery).
   b. Protect the alternator against overload in case of a high capacity LFP battery bank (most 12V alternators will overheat and fail if running at maximum output during more than 15 minutes).
   c. Limit charge current in order not to exceed the current handling capability of the wiring.

The maximum fuse rating is 100A (limiting charge current to approximately 80A).

Load/battery charger output/input (Power Port LB)

1. Maximum current in both directions: 200A continuous.
2. Peak discharge current electronically limited to 400A.
3. Battery discharge cut-off whenever the weakest cell falls below 3V.
4. Charge current is reduced to a safe level in case of cell unbalance or over temperature.

BMS 12/200 specification	
Maximum number of 12,8V batteries	10
Maximum charge current, Power Port AB	80A @ 40°C
Maximum charge current, Power Port LB	200A @ 40°C
Maximum continuous discharge current, LB	200A @ 40°C
Peak discharge current, LB (short circuit proof)	400A
Approximate cut-off voltage	11V
GENERAL	
No load current when operating	10mA
Current consumption when switched off (discharging is stopped and charging remains enabled, both through AB and LB, when switched off)	5mA
Current consumption after battery discharge cut-off due to low cell voltage	3mA
Operating temperature range	-40 to +60°C
Humidity, maximum	100%
Humidity, average	95%
Protection, electronics	IP65
DC connection AB, LB and battery minus	M8
DC connection battery plus	Faston female 6.3mm
LEDs	
Battery being charged through Power Port AB	green
Battery being charged through Power Port LB	green
Power port LB active	green
Over temperature	red
ENCLOSURE	
Weight (kg)	1,8
Dimensions (hxwxd in mm)	65 x 120 x 260
STANDARDS	
Emission	EN 50081-1
Immunity	EN 50082-1
Automotive Directive	2004/104/EC

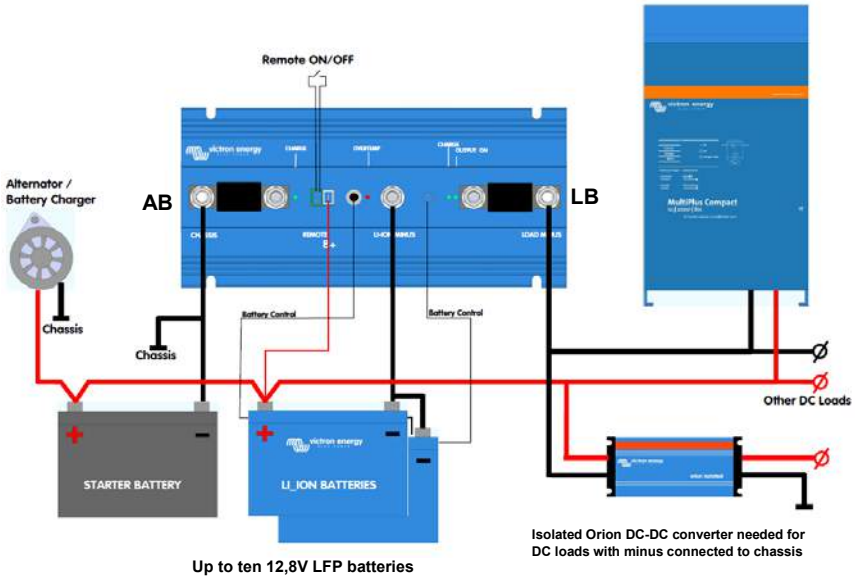

AGM Super Cycle battery

A truly innovative battery

The AGM Super Cycle batteries are the result of recent battery electrochemistry developments.
The paste of the positive plates is less sensitive to softening, even in case of repeated 100% discharge of the battery, and new additives to the electrolyte reduce sulfation in case of deep discharge.

Exceptional 100% depth of discharge (DoD) performance

Tests have shown that the Super Cycle battery does withstand at least three hundred 100% DoD cycles.
The tests consist of a daily discharge to 10,8V with I = $0,2C_{20}$, followed by approximately two hours rest in discharged condition, and then a recharge with I = $0,2C_{20}$.
The two hours rest period in discharged condition will damage most batteries within 100 cycles, but not the Super Cycle battery.

We recommend the Super Cycle battery for applications where an occasional discharge to 100% DoD, or frequent discharge to 60-80% DoD is expected.

Smaller and lighter

An additional advantage of the new chemistry is a slightly smaller size and less weight compared to our standard deep cycle AGM batteries.

Low internal resistance

The internal resistance is also slightly lower compared to our standard deep cycle AGM batteries.

Recommended charge voltage:

	Float Service	Cycle service Normal	Cycle service Fast recharge
Absorption		14,2 - 14,6 V	14,6 - 14,9 V
Float	13,5 - 13,8 V	13,5 - 13,8 V	13,5 - 13,8 V
Storage	13,2 - 13,5 V	13,2 - 13,5 V	13,2 - 13,5 V

Specifications

Article number	V	Ah C5 (10,8V)	Ah C10 (10,8V)	Ah C20 (10,8V)	l x w x h mm	Weight kg	CCA @0°F	RES CAP @80°F	Terminals
BAT412015080	12	13	14	15	151 x 100 x 103	4,1			Faston
BAT412025081	12	22	24	25	181 x 77 x 175	6,5			M5 insert
BAT412038081	12	34	36	38	267 x 77 x 175	9,5			M5 insert
BAT412060081	12	52	56	60	224 x 135 x 178	14	300	90	M5 insert
BAT412110081	12	82	90	100	260 x 168 x 215	26	500	170	M6 insert
BAT412112081	12	105	114	125	330 x 171 x 214	33	550	220	M8 insert
BAT412117081	12	145	153	170	336 x 172 x 280	45	600	290	M8 insert
BAT412123081	12	200	210	230	532 x 207 x 226	57	700	400	M8 insert

Cycle life

≥ 300 cycles @ 100% DoD (discharge to 10,8V with I = $0,2C_{20}$, followed by approximately two hours rest in discharged condition, and then a recharge with I = $0,2C_{20}$)
≥ 700 cycles @ 60% DoD (discharge during three hours with I = $0,2C_{20}$, immediately followed by recharge at I = $0,2C_{20}$)
≥ 1000 cycles @ 40% DoD (discharge during two hours with I = $0,2C_{20}$, immediately followed by recharge at I = $0,2C_{20}$)

Super Cycle Battery 12V 230Ah

Telecom Battery
Battery AGM 12V 200Ah

Designed for telecom applications; excellent 'floor space savers' for marine and vehicle applications

The deep cycle AGM telecom series has been designed for use in telecom systems. With front access terminals and small footprint, the batteries are ideal for racked systems. Similarly, these batteries can help solve limited floor space and access problems on board boats and vehicles.

AGM technology

AGM stands for Absorbent Glass Mat. In these batteries the electrolyte is absorbed into a glass-fibre mat between the plates by capillary action.

Low self-discharge

Because of the use of lead calcium grids and high purity materials, Victron VRLA batteries can be stored during long periods of time without recharge. The rate of self-discharge is less than 2% per month at 20°C. The self-discharge doubles for every increase in temperature by 10°C.

Low internal resistance

Accepts very high charge and discharge rates.

High cyclic life capability

More than 500 cycles at 50% depth of discharge.

Telecom Battery
Battery AGM 12V 200Ah

Learn more about batteries and battery charging

To learn more about batteries and charging batteries, please refer to our book 'Energy Unlimited' (available free of charge from Victron Energy and downloadable from www.victronenergy.com).

12V AGM Telecom battery	115Ah	165Ah	200Ah
Capacity 1 / 3 / 5 / 10 / 20 hours (% of nominal)	60 / 75 / 82 / 91 / 100 (@ 70°F/25°C, end of discharge 10,5V)		
Capacity 10 / 20 / 30 / 40 minutes (% of nominal)	33 / 44 / 53 / 57 (@ 70°F/25°C, end of discharge 9,6V)		
Nominal capacity (77°F/25°C, 10,5V)	115Ah	165Ah	200Ah
Cold Cranking Amps @ 0°F/-18°C	1000	1500	1800
DIN cold start current (A) @ 0°F/-18°C	600	900	1000
Short Circuit Current (A)	3500	5000	6000
Reserve Capacity (minutes)	200	320	400
Shelf life @ 70°F/20°C	1 year		
Absorption voltage (V) @ 70°F/20°C	14,4 – 14,7		
Float voltage (V) @ 70°F/20°C	13,6 – 13,8		
Storage voltage (V) @ 70°F/20°C	13,2		
Float design life @ 70°F/20°C	12 years		
Cycle design life @ 80% discharge	500		
Cycle design life @ 50% discharge	750		
Cycle design life @ 30% discharge	1800		
Dimensions (lxwxh, mm)	395 x 110 x 293mm	548 x 105 x 316mm	546 x 125 x 323mm
Dimensions (lxwxh, inches)	15.37 x 4.33 x 11.53	21.57 x 4.13 x 12.44	21.49 x 4.92 x 12.71
Weight (kg/pounds)	35kg/77lbs	49kg/88lbs	60kg/132lbs

Gel and AGM batteries

AGM Battery
12V 90Ah

GEL OPzV 2V cell

1. VRLA technology

VRLA stands for Valve Regulated Lead Acid, which means that the batteries are sealed. Gas will escape through the safety valves only in case of overcharging or cell failure.
VRLA batteries are maintenance free for life.

2. Sealed (VRLA) AGM Batteries

AGM stands for Absorbent Glass Mat. In these batteries the electrolyte is absorbed into a glass-fibre mat between the plates by capillary action. As explained in our book 'Energy Unlimited', AGM batteries are more suitable for short-time delivery of high currents than gel batteries.

3. Sealed (VRLA) Gel Batteries

Here the electrolyte is immobilized as gel. Gel batteries in general have a longer service life and better cycle capacity than AGM batteries.

4. Low Self-Discharge

Because of the use of lead calcium grids and high purity materials, Victron VRLA batteries can be stored during long periods of time without recharge. The rate of self-discharge is less than 2% per month at 20°C. The self-discharge doubles for every increase in temperature by 10°C.
Victron VRLA batteries can therefore be stored for up to a year without recharging, if kept under cool conditions.

5. Exceptional Deep Discharge Recovery

Victron VRLA batteries have exceptional discharge recovery, even after deep or prolonged discharge.
Nevertheless repeatedly deep and prolonged discharge has a very negative effect on the service life of all lead acid batteries, Victron batteries are no exception.

6. Battery Discharging Characteristics

The rated capacity of Victron AGM and Gel Deep Cycle batteries refers to 20 hour discharge, in other words: a discharge current of 0,05 C.
The rated capacity of Victron Tubular Plate Long Life batteries refers to 10 hours discharge.
The effective capacity decreases with increasing discharge current (see table 1). Please note that the capacity reduction will be even faster in case of a constant power load, such as an inverter.

Discharg time (constant current)	End Voltage V	AGM 'Deep Cycle' %	Gel 'Deep Cycle' %	Gel 'Long Life' %
20 hours	10,8	100	100	112
10 hours	10,8	92	87	100
5 hours	10,8	85	80	94
3 hours	10,8	78	73	79
1 hour	9,6	65	61	63
30 min.	9,6	55	51	45
15 min.	9,6	42	38	29
10 min.	9,6	38	34	21
5 min.	9,6	27	24	
5 seconds		8 C	7 C	

Table 1: Effective capacity as a function of discharge time
(the lowest row gives the maximum allowable 5 seconds discharge current)

Our AGM deep cycle batteries have excellent high current performance and are therefore recommended for high current applications such as engine starting. Due to their construction, Gel batteries have a lower effective capacity at high discharge currents. On the other hand, Gel batteries have a longer service life, both under float and cycling conditions.

7. Effect of temperature on service life

High temperature has a very negative effect on service life. The service life of Victron batteries as a function of temperature is shown in table 2.

Average Temperature	AGM 'Deep Cycle' years	Gel 'Deep Cycle' years	Gel 'Long Life' years
20°C / 68°F	7 - 10	12	20
30°C / 86°F	4	6	10
40°C / 104°F	2	3	5

Table 2: Design service life of Victron batteries under float service

8. Effect of temperature on capacity

As is shown by the graph below, capacity reduces sharply at low temperatures.

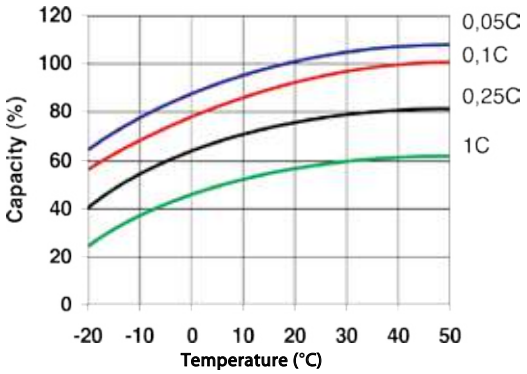

Fig. 1: Effect of temperature on capacity

9. Cycle life of Victron batteries

Batteries age due to discharging and recharging. The number of cycles depends on the depth of discharge, as is shown in figure 2.

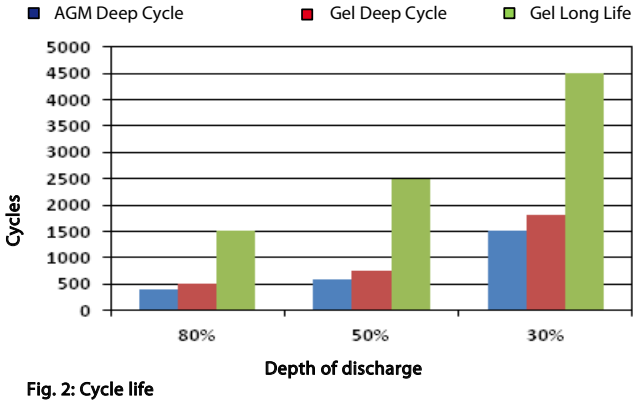

Fig. 2: Cycle life

10. Battery charging in case of cycle use: the 3-step charge curve

The most common charge curve used to charge VRLA batteries in case of cyclic use is the 3-step charge curve, whereby a constant current phase (the bulk phase) is followed by two constant voltage phases (absorption and float), see fig. 3.

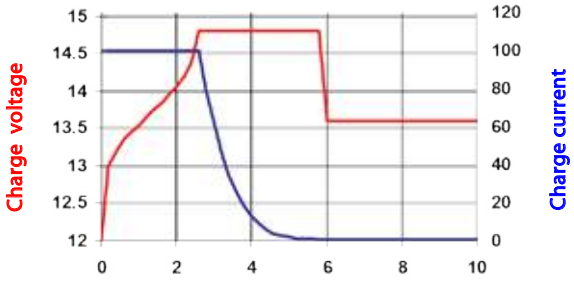

Fig. 3: Three step charge curve

During the absorption phase the charge voltage is kept at a relatively high level in order to fully recharge the battery within reasonable time. The third and last phase is the float phase: the voltage is lowered to standby level, sufficient to compensate for self-discharge.

Disadvantages of the traditional 3-step charge curve:

- During the bulk phase the current is kept at a constant and often high level, even after the gassing voltage (14,34V for a 12V battery) has been exceeded. This can lead to excessive gas pressure in the battery. Some gas will escape through the safety valves, reducing service life.
- Thereafter the absorption voltage is applied during a fixed period of time, irrespective of how deep the battery has been discharged previously. A full absorption period after a shallow discharge will overcharge the battery, again reducing service life (a.o. due to accelerated corrosion of the positive plates).
- Research has shown that battery life can be increased by decreasing float voltage to an even lower level when the battery is not in use.

11. Battery charging: longer battery life with Victron 4-step adaptive charging

Victron developed the adaptive charge curve. The 4-step adaptive chare curve is the result of years of research and testing.

The Victron four-step adaptive charge curve solves the 3 main problems of the 3-step curve:

- Battery Safe Mode
  In order to prevent excessive gassing, Victron has invented the 'Battery Safe Mode'. The Battery Safe Mode will limit the rate of voltage increase once the gassing voltage has been reached. Research has shown that this will reduce internal gassing to a safe level.
- Variable absorption time
  Based on the duration of the bulk stage, the charger calculates how long the absorption time should be in order to fully charge the battery. If the bulk time is short, this means the battery was already charged and the resulting absorption time will also be short, whereas a longer bulk time will also result in a longer absorption time.
- Storage mode
  After completion of the absorption period the battery should be fully charged, and the voltage is lowered to the float or standby level. If no discharge occurs during the next 24 hours, the voltage is reduced even further and the battery goes into storage mode. The lower storage voltage reduces corrosion of the positive plates.
  Once every week the charge voltage is increased to the absorption level for a short period to compensate for self-discharge (Battery Refresh mode).

12. Battery charging in case of standby use: constant voltage float charging

When a battery is not frequently deeply discharged, a 2-step charge curve can be used. During the first phase the battery is charged with a limited current (the bulk phase). Once a pre-set voltage has been reached the battery is kept at that voltage (the float phase).
This charge method is used for starter batteries in vehicles and in uninterruptible power supplies (UPS).

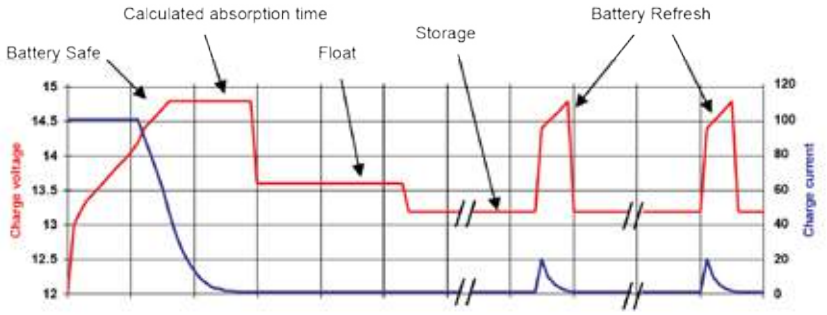

Fig. 4: Four-step adaptive charge curve

13. Optimum charge voltage of Victron VRLA batteries

The recommended charge voltage settings for a 12V battery are shown in table 3.

14. Effect of temperature on charging voltage

The charge voltage should be reduced with increased temperature. Temperature compensation is required when the temperature of the battery is expected to be less than 10°C / 50°F or more than 30°C / 85°F during long periods of time.
The recommended temperature compensation for Victron VRLA batteries is -4 mV / Cell (-24 mV /°C for a 12V battery).
The centre point for temperature compensation is 25°C / 70°F.

15. Charge current

The charge current should preferably not exceed 0,2C (20A for a 100Ah battery).The temperature of a battery will increase by more than 10°C if the charge current exceeds 0,2C. Therefore temperature compensation is required if the charge current exceeds 0,2C.

	Float Service (V)	Cycle service Normal (V)	Cycle service Fastest recharge (V)
Victron AGM 'Deep Cycle'			
Absorption		14,2 - 14,6	14,6 - 14,9
Float	13,5 - 13,8	13,5 - 13,8	13,5 - 13,8
Storage	13,2 - 13,5	13,2 - 13,5	13,2 - 13,5
Victron Gel 'Deep Cycle'			
Absorption		14,1 - 14,4	
Float	13,5 - 13,8	13,5 - 13,8	
Storage	13,2 - 13,5	13,2 - 13,5	
Victron Gel 'Long Life'			
Absorption		14,0 - 14,2	
Float	13,5 - 13,8	13,5 - 13,8	
Storage	13,2 - 13,5	13,2 - 13,5	

Table 3: Recommended charge voltage

12 Volt Deep Cycle AGM							General Specification
Article number	Ah	V	l x w x h mm	Weight kg	CCA @0°F	RES CAP @80°F	Technology: flat plate AGM Terminals: copper
BAT406225084	240	6	320 x 176 x 247	31	700	270	Rated capacity: 20 hr. discharge at 25°C Float design life: 7-10 years at 20°C Cycle design life: 400 cycles at 80% discharge 600 cycles at 50% discharge 1500 cycles at 30% discharge
BAT212070084	8	12	151 x 65 x 101	2,5			
BAT212120084	14	12	151 x 98 x 101	4,1			
BAT212200084	22	12	181 x 77 x 167	5,8			
BAT412350084	38	12	197 x 165 x 170	12,5			
BAT412550084	60	12	229 x 138 x 227	20	280	80	
BAT412600084	66	12	258 x 166 x 235	24	300	90	
BAT412800084	90	12	350 x 167 x 183	27	400	130	
BAT412101084	110	12	330 x 171 x 220	32	500	170	
BAT412121084	130	12	410 x 176 x 227	38	550	200	
BAT412151084	165	12	485 x 172 x 240	47	600	220	
BAT412201084	220	12	522 x 238 x 240	65	650	250	
BAT412124081	240	12	522 x 240 x 224	67	650	250	

12 Volt Deep Cycle GEL							General Specification
Article number	Ah	V	l x w x h mm	Weight kg	CCA @0°F	RES CAP @80°F	Technology: flat plate GEL Terminals: copper
BAT412550104	60	12	229 x 138 x 227	20	250	70	Rated capacity: 20 hr. discharge at 25°C Float design life: 12 years at 20°C Cycle design life: 500 cycles at 80% discharge 750 cycles at 50% discharge 1800 cycles at 30% discharge
BAT412600100	66	12	258 x 166 x 235	24	270	80	
BAT412800104	90	12	350 x 167 x 183	26	360	120	
BAT412101104	110	12	330 x 171 x 220	33	450	150	
BAT412121104	130	12	410 x 176 x 227	38	500	180	
BAT412151104	165	12	485 x 172 x 240	48	550	200	
BAT412201104	220	12	522 x 238 x 240	66	600	220	
BAT412126101	265	12	520 x 268 x 223	75	650	250	

2 Volt Long Life GEL					General Specification
Article number	Ah	V	l x b x h mm	Weight kg	Technology: tubular plate GEL Terminals: copper
BAT702601260	600	2	145 x 206 x 688	49	Rated capacity: 10 hr. discharge at 25°C Float design life: 20 years at 20°C Cycle design life: 1500 cycles at 80% discharge 2500 cycles at 50% discharge 4500 cycles at 30% discharge
BAT702801260	800	2	210 x 191 x 688	65	
BAT702102260	1000	2	210 x 233 x 690	80	
BAT702122260	1200	2	210 x 275 x 690	93	
BAT702152260	1500	2	210 x 275 x 840	115	
BAT702202260	2000	2	215 x 400 x 815	155	
BAT702252260	2500	2	215 x 490 x 815	200	
BAT702302260	3000	2	215 x 580 x 815	235	

Other capacities and terminal types: at request

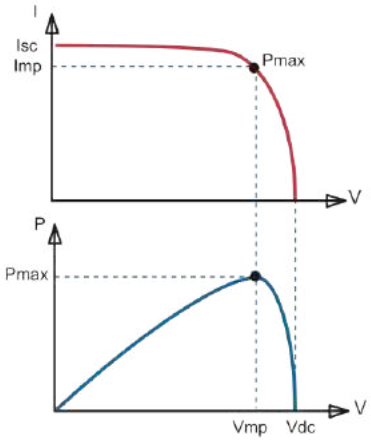

Maximum Power Point Tracking (MPPT)

Upper curve:
Output current (I) of a solar panel as function of output voltage (V).
The Maximum Power Point (MPP) is the point Pmax along the curve where the product I x V reaches its peak.

Lower curve:
Output power P = I x V as function of output voltage.
When using a PWM (not MPPT) controller the output voltage of the solar panel will be nearly equal to the voltage of the battery, and will be lower than Vmp.

MPPT Control

SmartSolar Control

VictronConnect Application

Feature highlights common to all models

- Ultra-fast Maximum Power Point Tracking (MPPT).
- Advanced Maximum Power Point Detection in case of partial shading conditions.
- Outstanding conversion efficiency.
- Natural convection cooling.
- Automatic battery voltage recognition.
- Flexible charge algorithm.
- Over temperature protection and power derating when temperature is high.

Sizing options:

- Suitable for a variety of battery voltages. Most models connect to 12, 24, and 48V batteries, some only connect to 12 and 24V batteries, or only to 48V batteries.
- Charge currents rating from 10A all the way up to 100A.
- Maximum PV array Voc voltages ranging from 75V up to 250V.
- Multiple chargers can be used in parallel, for large systems we recommend to use the models with a VE.Can communication port.

PV terminal options:

- TR - one positive and one negative screw terminal.
- MC4 - 3 pairs of paralleled MC4 connectors.

Bluetooth options:

- SmartSolar models have Bluetooth.
- BlueSolar models do not have Bluetooth. They can be retrofitted to have Bluetooth by connecting the VE.Direct Bluetooth Smart dongle. Advantage: the product is not Bluetooth accessible when the dongle is not connected. Note that on the SmartSolar models, Bluetooth can be disabled.

Display options:

- VictronConnect Application. Connects via Bluetooth or via the VE.Direct - USB interface
- MPPT Control. Connects to all models via a VE.Direct cable
- SmartSolar Control Display. Plugs directly into the housing of the larger models
- GX device
- VRM website (GX monitoring device needed)

Communication ports:

- VE.Direct - all models
- VE.Direct and VE.Can - limited models. VE.Can is especially suitable for systems with multiple solar chargers. All units are simply “daisy chained” to each other with a single RJ45 cable between each unit and also between the las unit in the chain and the a GX monitoring device.

Temperature sensor options:

- Internally (all models).
- Externally via the Smart Battery Sense (only SmartSolar models).

Load output options:

- Physical output - On the 10, 15 and 20A models.
- Virtual output - via VE.Direct TX digital output cable and the BatteryProtect or a solid-state relay.

Remotely enabling and disabling the charger:

- All larger units feature the Victron standard remote on/off terminals. All models that don’t feature an onboard Remote on/off terminal can be remotely controlled by using the VE.Direct non inverting remote on/off cable – ASS030550310. Note that this prohibits using the VE.Direct port for anything else.

Firmware update options:

- Local updates via the VictronConnect Application (via Bluetooth or USB-VE.Direct interface)
- Remote updates via VRM website and a GX device

Optional accessories:

- VictronConnect Application (free download)
- Wire boxes, to cover and protect the terminals. See table on page 2 for wire box types
- Control and display panels: MPPT control or SmartSolar control)
- GX monitoring device (CCGX Venus GX or Octo GX)
- Data cables: VE.Direct cable, RJ45 Cable (CanBus models only) USB-VE.Direct interface
- External control cables: TX cable, non-inverting cable
- Bluetooth dongle (for non-smart models)

More information:

- To access the above-mentioned documents or information: press the search button on our website and enter the appropriate search word.
- For connection to a Color Control GX or other GX device see: https://www.victronenergy.com/live/venus-os:start.

BlueSolar Charge Controller	Load output	Battery voltage	Optional display	Bluetooth	Com. port	Remote on-off	Programmable relay	Wire Box
75/10	15A	12/24	MPPT control	Optional dongle	VE.Direct	No	No	S 75-10/15
75/15	15A	12/24	MPPT control	Optional dongle	VE.Direct	No	No	S 75-10/15
100/15	15A	12/24	MPPT control	Optional dongle	VE.Direct	No	No	S 100-15
100/30	No	12/24	MPPT control	Optional dongle	VE.Direct	No	No	M
100/50	No	12/24	MPPT control	Optional dongle	VE.Direct	No	No	M
150/35	No	12/24/36/48	MPPT control	Optional dongle	VE.Direct	No	No	M
150/45-Tr	No	12/24/36/48	MPPT control	Optional dongle	VE.Direct	No	No	L
150/45-MC4	No	12/24/36/48	MPPT control	Optional dongle	VE.Direct	No	No	L
150/60-Tr	No	12/24/36/48	MPPT control	Optional dongle	VE.Direct	No	No	L
150/60-MC4	No	12/24/36/48	MPPT control	Optional dongle	VE.Direct	No	No	L
150/70-Tr	No	12/24/36/48	MPPT control	Optional dongle	VE.Direct	No	No	L
150/70-MC4	No	12/24/36/48	MPPT control	Optional dongle	VE.Direct	No	No	L
SmartSolar Charge Controller	**Load output**	**Battery voltage**	**Optional display**	**Bluetooth**	**Com. port**	**Remote on-off**	**Programmable relay**	**Wire Box**
75/10	15A	12/24	MPPT control	Built-in	VE.Direct	No	No	S 75-10/15
75/15	15A	12/24	MPPT control	Built-in	VE.Direct	No	No	S 75-10/15
100/15	15A	12/24	MPPT control	Built-in	VE.Direct	No	No	S 100-15
100/20	20A	12/24	MPPT control	Built-in	VE.Direct	No	No	S 100-20
100/20-48V	1A	48	MPPT control	Built-in	VE.Direct	No	No	S 100-20
100/30	No	12/24	MPPT control	Built-in	VE.Direct	No	No	M
100/50	No	12/24	MPPT control	Built-in	VE.Direct	No	No	M
150/35	No	12/24/36/48	MPPT control	Built-in	VE.Direct	No	No	M
150/45-Tr	No	12/24/36/48	MPPT ctrl & SmartSolar ctrl	Built-in	VE.Direct	Yes	Yes	L
150/45-MC4	No	12/24/36/48	MPPT ctrl & SmartSolar ctrl	Built-in	VE.Direct	Yes	Yes	L
150/60-Tr	No	12/24/36/48	MPPT ctrl & SmartSolar ctrl	Built-in	VE.Direct	Yes	Yes	L
150/60-MC4	No	12/24/36/48	MPPT ctrl & SmartSolar ctrl	Built-in	VE.Direct	Yes	Yes	L
150/70-Tr	No	12/24/36/48	MPPT ctrl & SmartSolar ctrl	Built-in	VE.Direct	Yes	Yes	L
150/70-MC4	No	12/24/36/48	MPPT ctrl & SmartSolar ctrl	Built-in	VE.Direct	Yes	Yes	L
150/70-Tr-CAN	No	12/24/36/48	MPPT ctrl & SmartSolar ctrl	Built-in	VE.Direct & VE.Can	Yes	Yes	L
150/85-Tr	No	12/24/36/48	MPPT ctrl & SmartSolar ctrl	Built-in	VE.Direct	Yes	Yes	XL
150/85-MC4	No	12/24/36/48	MPPT ctrl & SmartSolar ctrl	Built-in	VE.Direct	Yes	Yes	XL
150/100-Tr	No	12/24/36/48	MPPT ctrl & SmartSolar ctrl	Built-in	VE.Direct	Yes	Yes	XL
150/100-MC4	No	12/24/36/48	MPPT ctrl & SmartSolar ctrl	Built-in	VE.Direct	Yes	Yes	XL
150/100-Tr-CAN	No	12/24/36/48	MPPT ctrl & SmartSolar ctrl	Built-in	VE.Direct & VE.Can	Yes	Yes	XL
250/60-Tr	No	12/24/36/48	MPPT ctrl & SmartSolar ctrl	Built-in	VE.Direct	Yes	Yes	L
250/60-MC4	No	12/24/36/48	MPPT ctrl & SmartSolar ctrl	Built-in	VE.Direct	Yes	Yes	L
250/70-Tr	No	12/24/36/48	MPPT ctrl & SmartSolar ctrl	Built-in	VE.Direct	Yes	Yes	L
250/70-MC4	No	12/24/36/48	MPPT ctrl & SmartSolar ctrl	Built-in	VE.Direct	Yes	Yes	L
250/85-Tr	No	12/24/36/48	MPPT ctrl & SmartSolar ctrl	Built-in	VE.Direct	Yes	Yes	XL
250/85-MC4	No	12/24/36/48	MPPT ctrl & SmartSolar ctrl	Built-in	VE.Direct	Yes	Yes	XL
250/100-Tr	No	12/24/36/48	MPPT ctrl & SmartSolar ctrl	Built-in	VE.Direct	Yes	Yes	XL
250/100-MC4	No	12/24/36/48	MPPT ctrl & SmartSolar ctrl	Built-in	VE.Direct	Yes	Yes	XL

Color Control GX

Venus GX

Octo GX

Smart Battery Sense

VE.Direct Bluetooth Smart Dongle

VE.Direct to USB interface

BlueSolar monocrystalline panels

BlueSolar Monocrystalline 305W

- Low voltage-temperature coefficient enhances high-temperature operation.
- Exceptional low-light performance and high sensitivity to light across the entire solar spectrum.
- 25-Year limited warranty on power output and performance.
- 5-Year limited warranty on materials and workmanship.
- Sealed, waterproof, multi-functional junction box gives high level of safety.
- High performance bypass diodes minimize the power drop caused by shade.
- Advanced EVA (Ethylene Vinyl Acetate) encapsulation system with triple-layer back sheet meets the most stringent safety requirements for high-voltage operation.
- A sturdy, anodized aluminium frame allows modules to be easily roof-mounted with a variety of standard mounting systems.
- Highest quality, high-transmission tempered glass provides enhanced stiffness and impact resistance.
- High power models with pre-wired quick-connect system with MC4 (PV-ST01) connectors.

MC4 connectors

Article Number	Description	Net Weight	Electrical data under STC (1)				
			Nominal Power	Max-Power Voltage	Max-Power Current	Open-Circuit Voltage	Short-Circuit Current
			Pmpp	Vmpp	Impp	Voc	Isc
		Kg	W	V	A	V	A
SPM040201200	20W-12V Mono 440 x 350 x 25mm series 4a	1.9	20	18.5	1.09	22.6	1.19
SPM040301200	30W-12V Mono 560 x 350 x 25mm series 4a	2.2	30	18.7	1.61	22.87	1.76
SPM040401200	40W-12V Mono 425 x 668 x 25mm series 4a	3.1	40	18.3	2.19	22.45	2.40
SPM040551200	55W-12V Mono 545 x 668 x 25mm series 4a	4	55	18.8	2.94	22.9	3.22
SPM040901200	90W-12V Mono 780 x 668 x 30mm series 4a	6.1	90	19.6	4.59	24.06	5.03
SPM041151200	115W-12V Mono 1015 x 668 x 30mm series 4a	8	115	19.0	6.04	23.32	6.61
SPM041751200	175W-12V Mono 1485 x 668 x 30mm series 4a	11	175	19.4	9.03	23.7	9.89
SPM042152400	215W-24V Mono 1580 x 808 x 35mm series 4a	15	215	37.4	5.75	45.82	6.30
SPM043052000	305W-20V Mono 1640 x 992 x 35mm series 4a	18	305	32.5	9.38	39.7	10.27
SPM043602400	360W-24V Mono 1956 x 992 x 40mm series 4a	22	360	38.4	9.38	47.4	10.24

Module	SPM 040201200	SPM 040301200	SPM 04040120	SPM 040551200	SPM 040901200	SPM 041151200	SPM 041751200	SPM 042152400	SPM 043052000	SPM 043602400
Nominal Power (±3% tolerance)	20W	30W	40W	55W	90W	115W	175W	215W	305W	360W
Cell type	Monocrystalline									
Number of cells in series	36							72	60	72
Maximum system voltage	1000V									
Temperature coefficient of MPP (%)	-0.45/°C	-0.45/°C	-0.45/°C	-0.45/°C	-0.45/°C	-0.45/°C	-0.45/°C	-0.45/°C	-0.45/°C	-0.45/°C
Temperature coefficient of Voc (%)	-0.35/°C	-0.35/°C	-0.35/°C	-0.35/°C	-0.35/°C	-0.35/°C	-0.35/°C	-0.35/°C	-0.35/°C	-0.35/°C
Temperature coefficient of Isc (%)	+0.04/°C	+0.04/°C	+0.04/°C	+0.04/°C	+0.04/°C	+0.04/°C	+0.04/°C	+0.04/°C	+0.04/°C	+0.04/°C
Temperature Range	-40°C to +85°C									
Surface Maximum Load Capacity	200 kg/m²									
Allowable Hail Load	23 m/s, 7.53 g									
Junction Box Type	PV-LH0805	PV-LH0806			PV-LH0801	PV-LH0808		PV-LH0701	PV-JB002	
Length of Cables / Connector Type	No cable				900 mm MC4					
Output tolerance	+/-3%									
Frame	Aluminium									
Product warranty	5 years									
Warranty on electrical performance	10 years 90% + 25 years 80% of power output									
Smallest packaging unit	1 panel									
Quantity per pallet	380	260	180	140	90	80	36	32	32	37

1) STC (Standard Test Conditions): 1000 W/m², 25°C, AM (Air Mass) 1.5

BlueSolar Polycrystalline 175W

- Low voltage-temperature coefficient enhances high-temperature operation.
- Exceptional low-light performance and high sensitivity to light across the entire solar spectrum.
- 25-Year limited warranty on power output and performance.
- 5-Year limited warranty on materials and workmanship.
- Sealed, waterproof, multi-functional junction box gives high level of safety.
- High performance bypass diodes minimize the power drop caused by shade.
- Advanced EVA (Ethylene Vinyl Acetate) encapsulation system with triple-layer back sheet meets the most stringent safety requirements for high-voltage operation.
- A sturdy, anodized aluminium frame allows modules to be easily roof-mounted with a variety of standard mounting systems.
- Highest quality, high-transmission tempered glass provides enhanced stiffness and impact resistance.
- High power models with pre-wired quick-connect system with MC4 (PV-ST01) connectors.

MC4 connectors

Article Number	Description	Net weight	Electrical data under STC (1)				
			Nominal Power	Max-Power Voltage	Max-Power Current	Open-Circuit Voltage	Short-Circuit Current
			P_{MPP}	V_{MPP}	I_{MPP}	Voc	Isc
		Kg	W	V	A	V	A
SPP040201200	20W-12V Poly 440 x 350 x 25mm series 4a	1.9	20	18.4	1.09	21.96	1.18
SPP040301200	30W-12V Poly 655 x 350 x 25mm series 4a	2.8	30	18.2	1.66	21.80	1.80
SPP040451200	45W-12V Poly 425 x 668 x 25mm series 4a	3.1	45	19.1	2.36	22.90	2.55
SPP040601200	60W-12V Poly 545 x 668 x 25mm series 4a	4	60	19.3	3.12	23.10	3.37
SPP040901200	90W-12V Poly 780 x 668 x 30mm series 4a	6.1	90	19.5	4.61	23.44	4.98
SPP041151200	115W-12V Poly 1015 x 668 x 30mm series 4a	8	115	18.94	6.08	22.73	6.56
SPP041751200	175W-12V Poly 1485 x 668 x 30mm series 4a	12	175	18,3	9.56	21.9	10.24
SPP032602000	260W-20V Poly 1640 x 992 x 40mm series 3a	17	260	30	8.66	36.75	9.30
SPP042702000	270W-20V Poly 1640 x 992 x 35mm series 4a	18.4	270	31.7	8.52	38.04	9.21
SPP043302400	330W-24V Poly 1956 x 992 x 40mm series 4a	22.5	330	37.3	8.86	44.72	9.57

Module	SPP 040201200	SPP 040301200	SPP 040451200	SPP 040601200	SPP 040901200	SPP 041151200	SPP 041751200	SPP 032601200	SPP 042702000	SPP 043302400
Nominal Power (± 3% tolerance)	20W	30W	45W	60W	90W	115W	175W	260W	270W	330W
Cell type	Polycrystalline									
Number of cells in series	36							60	60	72
Maximum system voltage (V)	1000V									
Temperature coefficient of PMPP (%)	-0.45/°C	-0.45/°C	-0.45/°C	-0.45/°C	-0.45/°C	-0.45/°C	-0.45/°C	-0.45/°C	-0.47/°C	-0.45/°C
Temperature coefficient of Voc (%)	-0.35/°C	-0.35/°C	-0.35/°C	-0.35/°C	-0.35/°C	-0.35/°C	-0.35/°C	-0.35/°C	-0.34/°C	-0.35/°C
Temperature coefficient of Isc (%)	+0.04/°C	+0.04/°C	+0.04/°C	+0.04/°C	+0.04/°C	+0.04/°C	+0.04/°C	+0.04/°C	+0.045/°C	+0.04/°C
Temperature Range	-40°C to +85°C									
Surface Maximum Load Capacity	200 kg/m²									
Allowable Hail Load	23 m/s, 7.53 g									
Junction Box Type	PV-LH0805	PV-LH0806			PV-LH0801	PV-LH0808			PV-JB002	
Length of Cable / connector	No cable				900 mm / MC4					
Output tolerance	+/-3%									
Frame	Aluminium									
Product warranty	5 years									
Warranty on electrical performance	10 years 90% + 25 years 80% of power output									
Smallest packaging unit	1 panel									
Quantity per pallet	380	240	180	140	90	80	36	20	32	37

1) STC (Standard Test Conditions): 1000 W/m², 25°C, AM (Air Mass) 1.5

Inverter/charger system with intelligent shore and generator power management

PowerControl: Dealing with limited generator or grid power All models in the MultiPlus range feature powerful battery chargers. When the largest model is working hard it can draw almost 10A from a 230V supply. Using the remote panel it is possible to 'dial-in' the maximum current that is available from mains or generator. The MultiPlus will then automatically regulate the charger taking account of other system AC loads and ensuring the charger only uses what is spare. This way it is possible to avoid tripping the mains power or overloading the generator.

PowerControl ©

Battery charger reduces its output, if required, to avoid overload of supply when system consumption is high.

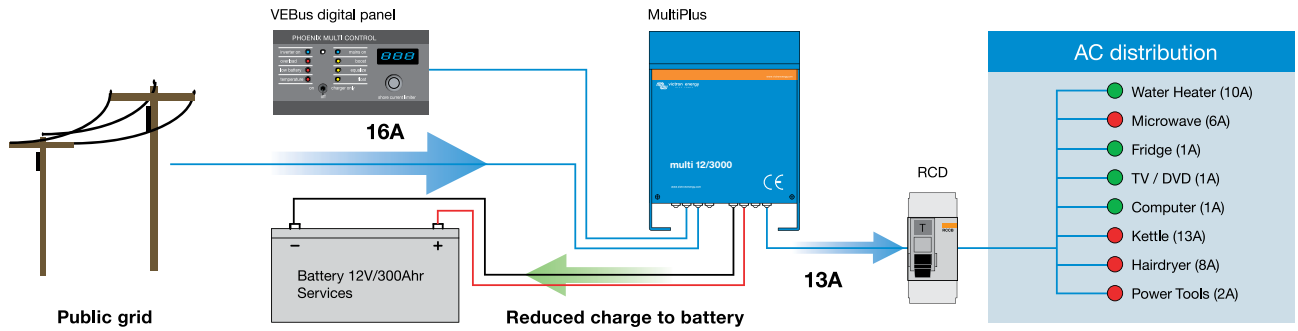

PowerAssist: Boosting the power available from mains or generator, an innovative feature of Multiplus. The feature that most distinguishes the MultiPlus from other inverter/chargers is PowerAssist. This feature takes the principle of PowerControl to a further dimension by allowing a MultiPlus to supplement the power available from mains or generator to 'assist' during periods of high demand. Peak power demand is almost always sustained only for short periods, either a few minutes (in the case of items like cooking appliances) or just a few seconds (in the case of the burst of energy needed to start an air-conditioning or refrigeration compressor).

With the capacity of the generator or mains power set on the remote panel, the MultiPlus detects when the load is becoming too much for the supply and will instantly provide the extra power required. When the demand has reduced, the unit returns to charging the battery. This feature is equally effective in large and small systems helping to reduce the required generator capacity or to achieve greater things with limited mains power. There is even a special feature to enable the MultiPlus/Quattro to work perfectly with portable generators.

PowerAssist ©

Inverter boosts incoming power, if required, to avoid overload of supply when system consumption exceeds supply.

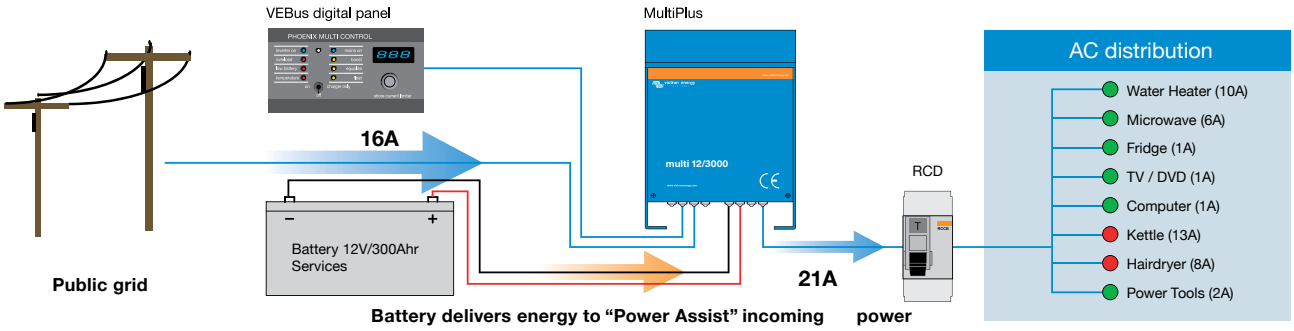

Comfort system	
Appliance	System
Lighting	Quattro 12/3000/120
Communication & navigation	BMV-712 battery monitor
Water heater	2x12V/200AH and 1X80AH batteries
Microwave oven	Digital control remote panel
2 ring introduction hob	Alternator 12/150
Coffee machine/Kettle	DC Link Box
TV/DVD	Isolation transformer
Laptop	Cyrix battery separator
Smal chargers (mobile phone, electric shaver)	
Refrigerator and freezer	Solarpanel and MPTT Solar charger

Comfort plus system	
Appliance	System
Lighting	2 xQuattro 24/5000/120
Communication & navigation	Color Control GX
Water heater	4x12V/200AH and 1X80AH batteries
Electric gallery with 4 ring induction hob, microwave/combi oven, refrig-erator, freezer, washer/dryer.	Color Control GX
Coffee machine and kettle	Alternator 12/150
TV/DVD	DC Link box
Multimedia PC	Isolation transformers
Small chargers (mobile, phone, shaver etc)	
Modest air-conditioning	Solarpanel and MPPT Solar charger

Comfort system - 7 kVA (30A) capacity

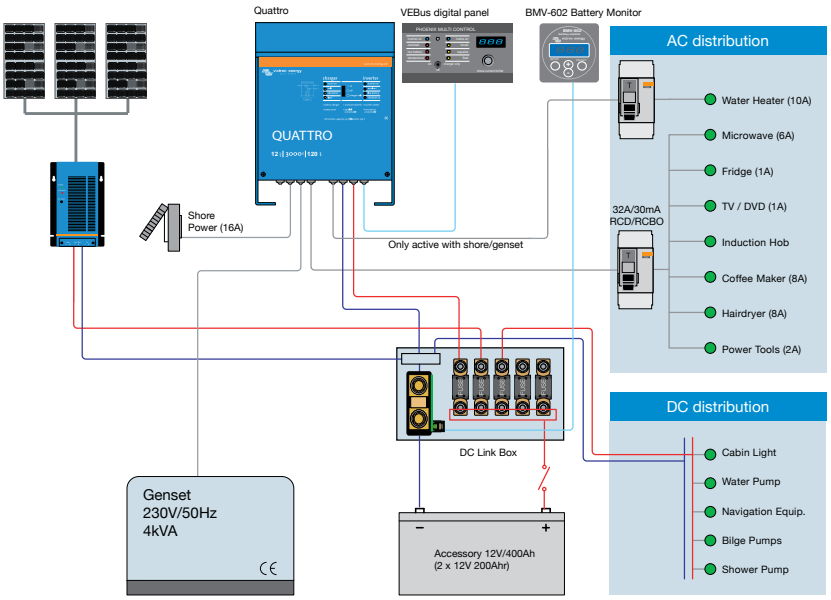

Comfort plus system - 25 kVA capacity

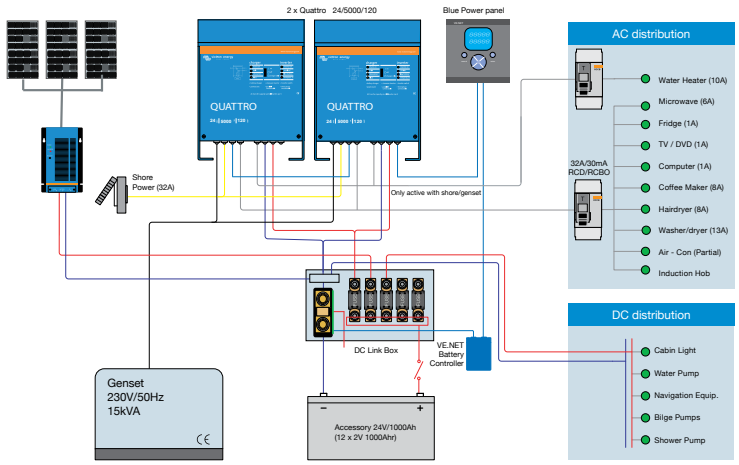

With over 45 years of experience, Victron Energy enjoys an unrivalled reputation for technical innovation, reliability and quality. Victron is a world leader in the supply of self-supporting electrical power. Our products have been designed to meet the most demanding situations faced by a diversity of craft, recreational and commercial alike. Victron's ability to meet the demand for customized off-grid systems is unprecedented. Our product range includes sine wave inverters and inverter/chargers, battery chargers, DC/DC converters, transfer switches, gel and AGM batteries, battery monitors, solar charge controllers, solar panels, complete network solutions and many other innovative solutions.

World-wide service and support

Having served the off-grid, industrial and vehicle markets as well as both the commercial and leisure marine sectors for over 45 years, Victron has an established network of dealers and distributors covering the whole world. Our customer base is such that providing prompt and competent local service is essential.

This is reflected in the capabilities of our support network. Our flexible approach to service support and our commitment to quick turnaround for repairs is marketleading. There are countless examples of Victron products that have provided for decades of reliable service in the most demanding applications. This level of reliability combined with the highest level of technical know-how results in Victron Energy power systems that offer the very best value available.

BMV-712 Smart
85
25.46V
-7.5A
254h
5h 0m
12.80V
Open

SAL064136020
REV 03
2020-03

victron energy
BLUE POWER

Victron Energy B.V.
De Paal 35 • 1351JG Almere • The Netherlands
Phone: +31 (0)36 535 97 00 • E-mail: sales@victronenergy.com
www.victronenergy.com