Off-grid, backup & island systems

victron energy
BLUE POWER

Energy. Anytime. Anywhere.

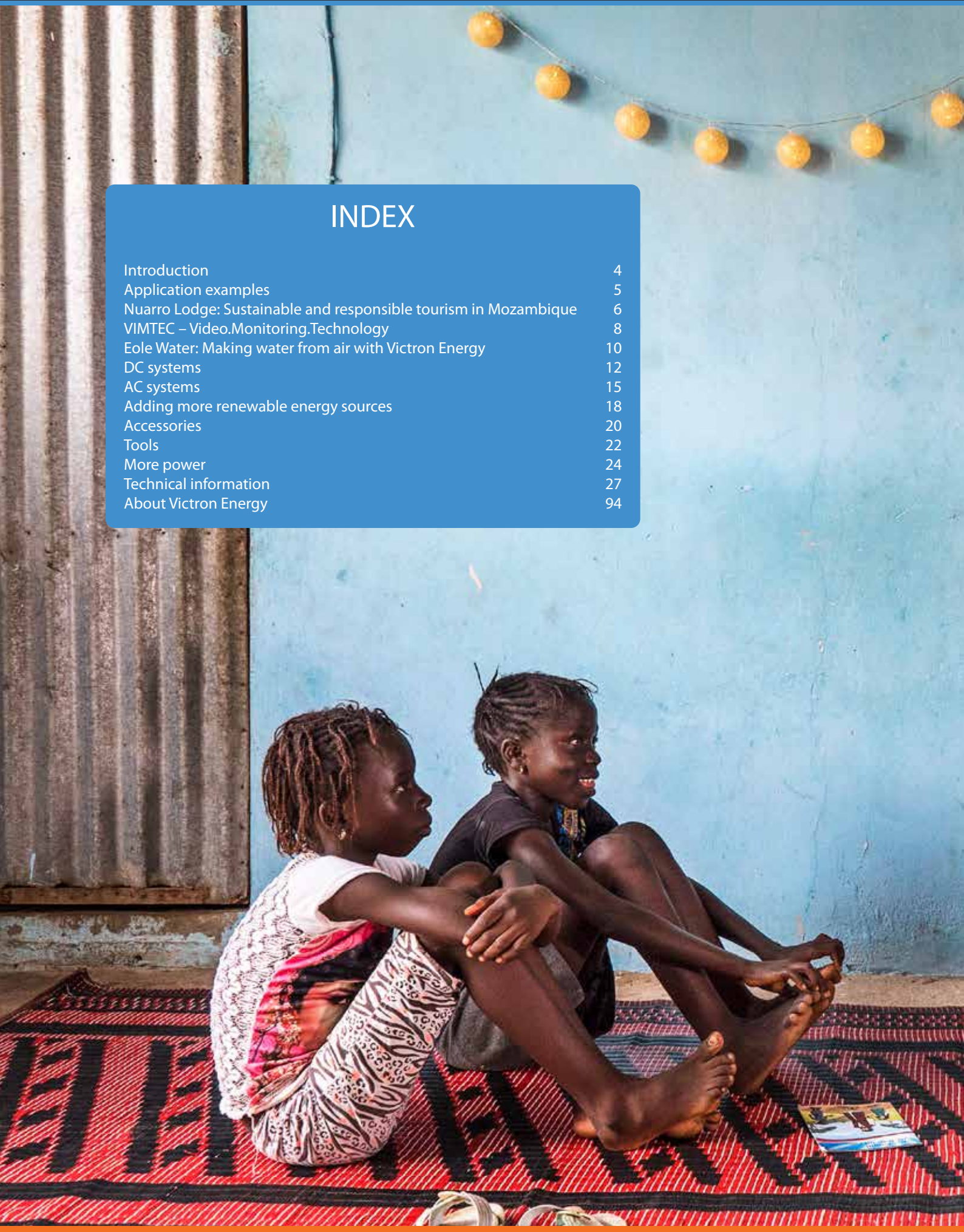

INDEX

Introduction	4
Application examples	5
Nuarro Lodge: Sustainable and responsible tourism in Mozambique	6
VIMTEC – Video.Monitoring.Technology	8
Eole Water: Making water from air with Victron Energy	10
DC systems	12
AC systems	15
Adding more renewable energy sources	18
Accessories	20
Tools	22
More power	24
Technical information	27
About Victron Energy	94

Photo: Ewien van Bergeijk – Kwant

Off-grid

The presence of a functional electricity grid is not always as obvious as it would seem to be. An insufficient infrastructure is often the cause for an unreliable grid. Things become even more difficult when there is no grid at all. And yet you are in need of a reliable electricity supply. A local and properly functioning system is the only answer at this point. Victron Energy offers you such an answer. We are proud to offer you our modern translation for freedom and independence.
Energy, Anytime, Anywhere.

Hybrid systems

If the sun is your only available source of energy, the choice is simple. You will choose a solar system in order to meet your demand for energy. If there are more sources available, these could support your solar system. Because the fact is, that the sun isn't always able to entirely cover your energy demand. A solar system is often supported by a generator set or a wind generator. These energy sources can make certain that the solar deficit is covered. Designing combinations such as these, which include several energy sources, is what Victron Energy does best.

Our products are being used in all off-grid and grid-connected systems, for example autonomous buildings, oil platforms and private houses.

Nuarro Lodge

Video Monitoring Technology

Eole Water

Nuarro Lodge: Sustainable and responsible tourism in Mozambique

Nuarro Lodge

Located on the shores of the warm and azure Indian Ocean in northern Mozambique, lies the remotely, but specifically chosen Nuarro Lodge. Backed by the wild Mozambican bush, fringed with old and established baobab trees to the back; and fronted by the calm and aquamarine bay of Nanatha, the lodge is peppered along a more than 2 km-long, powdery-white beach in the middle.

Behind the scenes, powering the Nuarro Lodge lighting, is a newly upgraded Victron Energy hybrid-30kVA, 3-phase system with 38kWp of solar power. The Lodge though is but one part of the Nuarro project that Victron Energy and their partner companies are involved with.

Pristine, off-grid and remote

Nuarro is built from natural materials (by the local community) in an 800 hectare (8 sq km) environmentally sensitive concession area of the Baixo da Pinda peninsula.

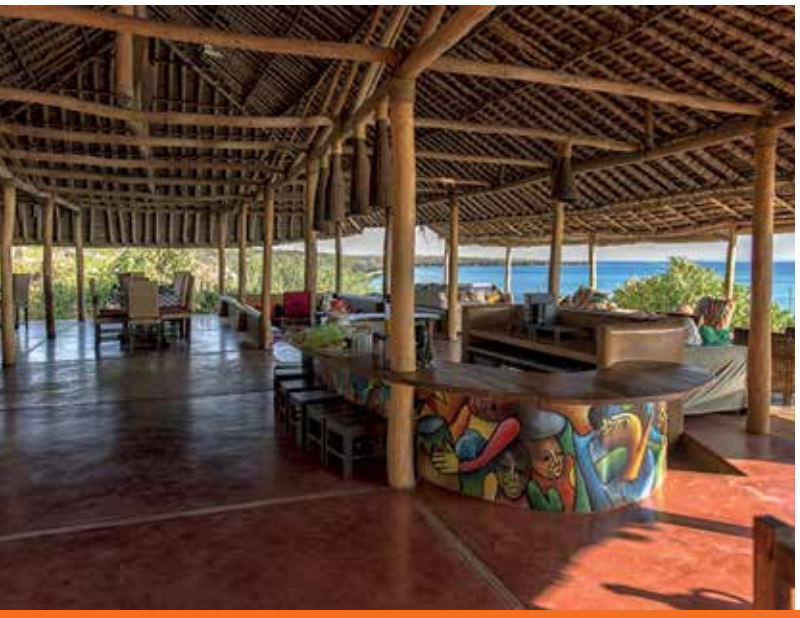

In the words of the company, working in and being considerate of such an area is all about friendly people, top-class activities and fantastic food, whilst showcasing a spectacular, pristine environment in the most responsible way possible.

Even though it is off-grid and remote, Nuarro generates its own electricity and clean water using renewable energy which helps bring sustainable tourism to the area without compromising the basic needs and comforts of guests. This ensures the local people and community benefit also, by bringing work to the surrounding area.

Upgrading Nuarro Lodge's energy systems

Building of the lodge started in 2007 and the owners of the lodge have over the years upgraded the renewable energy and water system to fit the needs of the guests, community and employees. The best choice for this is a hybrid-system for the reliable generation of electricity with the lowest carbon footprint, with hot water being supplied by solar geysers directly to the buildings.
During the recent upgrades Nuarro's owners decided to install a new inverter and solar charge system. Reliability and remote monitoring have been missing for years and the decision was therefore made to invest in Victron Energy products for their known reliability in off-grid applications in harsh and remote environments.

Energy system configuration

The off-grid system consists of a three phase 30kVA system with 38kWp solar power, 2,400 Ah battery bank with a 40kVA backup generator. Three Victron 10kVA Quattros in a 3-phase configuration and nine DC-coupled 150/85 MPPT Victron Energy solar charge controllers are all installed in/on one cabinet, including two battery monitors and a Color Control GX.

The 38 kWp solar power is generating an average energy of 180kWh per day, which is partly used by the lodge during the day and also stored in the battery bank for night use.

During overcast days and high night loads the generator automatically starts based on the SOC (State of Charge) setting in the BMV battery monitors. The Color Control GX is connected via long range Wi-Fi to the Wi-Fi satellite router which connects to the internet for remote monitoring and management.

The entire lodge can run from solar including the borehole pump, water treatment plant, the diving compressor, the cold and freezer rooms, fridges and other restaurant and bar equipment. During the night the load is minimised by using timers switching off non-essentials to minimise the use of energy from the battery bank during the night.

For further information on Nuarro Lodge please visit:
http://www.nuarro.com/

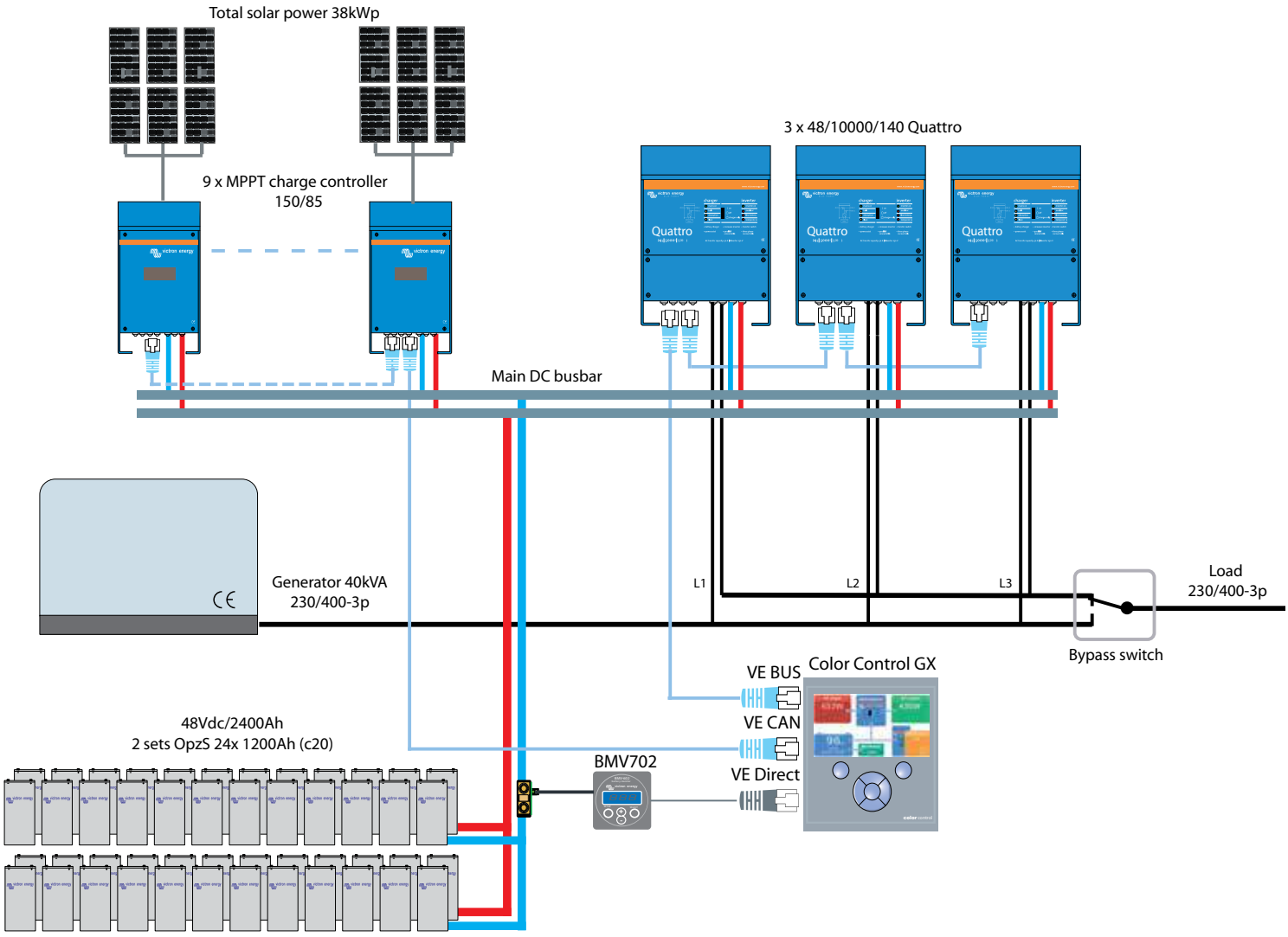

VIMTEC – Video.Monitoring.Technology

GEMTEC GmbH, a customer of Service Team Döbeln, is a mid-sized, family-owned firm specializing in security and communication systems. Over the years this company has grown steadily to become one of the largest providers of security equipment in Saxony.

In its quest for new solutions, GEMTEC has devised a totally new product which uses Victron Energy products supplied by Service Team Döbeln. This product is called the VIMTEC MBE, which is a mobile and autonomous surveillance unit. This highly versatile system is designed to monitor construction sites, large events, traffic, and much more besides.

Hybrid autonomy with Victron Energy

Standalone power for the VIMTEC MBE is provided by a hybrid system consisting of a diesel generator with Victron Energy battery storage. This enables the unit to operate in isolation for up to 120 days in areas where no currently installed surveillance infrastructure exists.

At the heart of the unit, within the tamper proof body which incorporates its own system security, is a pneumatic mast that can extend up to 15 m in height with 360 degree cameras and lighting on the masthead.

A range of surveillance fitment options exists which can include thermal imaging, IR lighting, motion detection, access control, perimeter surveillance and alarm verification from a distance. The units can also allow verbal contact via loudspeaker along with video recording, management systems and image analysis software. The commissioning of the specific detection and evaluation techniques can even be carried out remotely.

Assisting this level of sophistication and to make this all possible are Victron Energy gel batteries, a MultiPlus, BMV-702 battery monitoring along with the offsite remote control and monitoring made possible by a Color Control GX and the Victron Energy VRM portal.

To learn more about the VIMTEC MBE visit:
http://www.vimtec.eu/en/

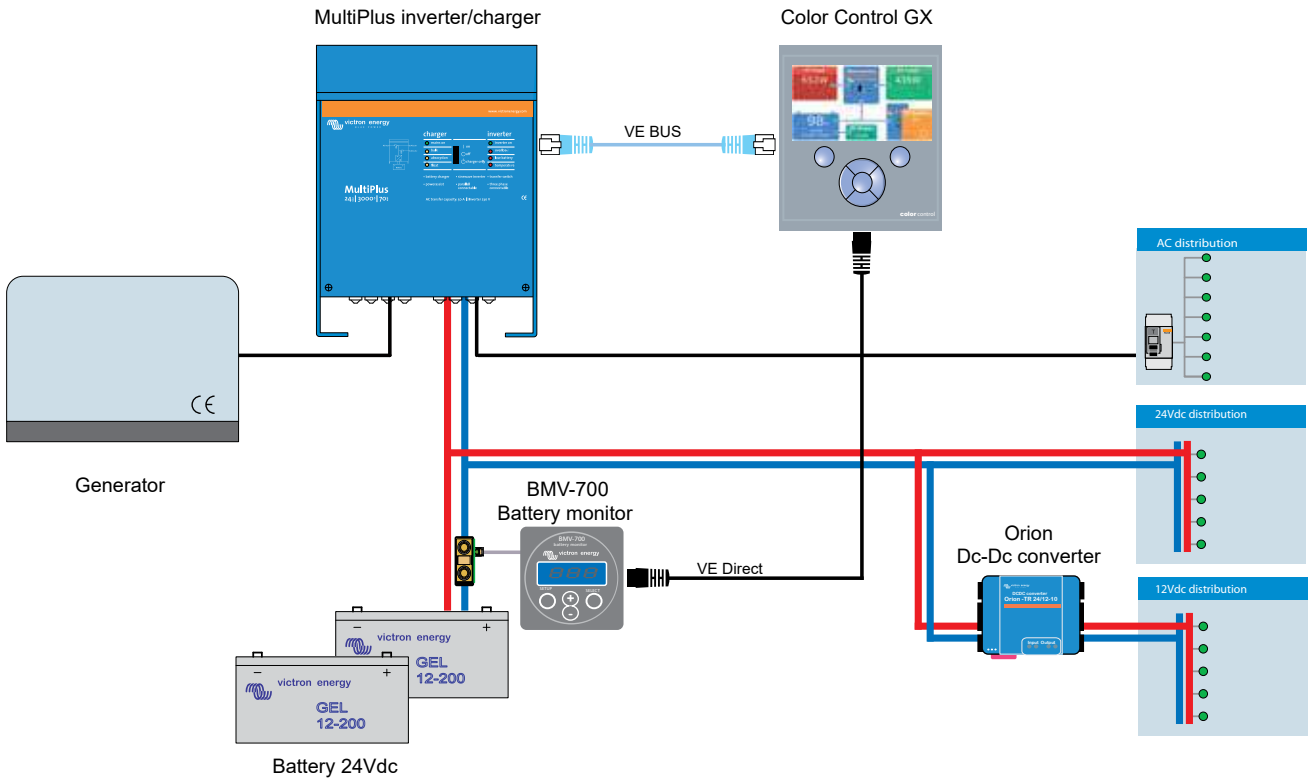
MultiPlus inverter/charger
Color Control GX
VE BUS
AC distribution
24Vdc distribution
12Vdc distribution
Generator
BMV-700
Battery monitor
VE Direct
Orion
Dc-Dc converter
GEL
12-200
Battery 24Vdc

Eole Water: Making water from air with Victron Energy

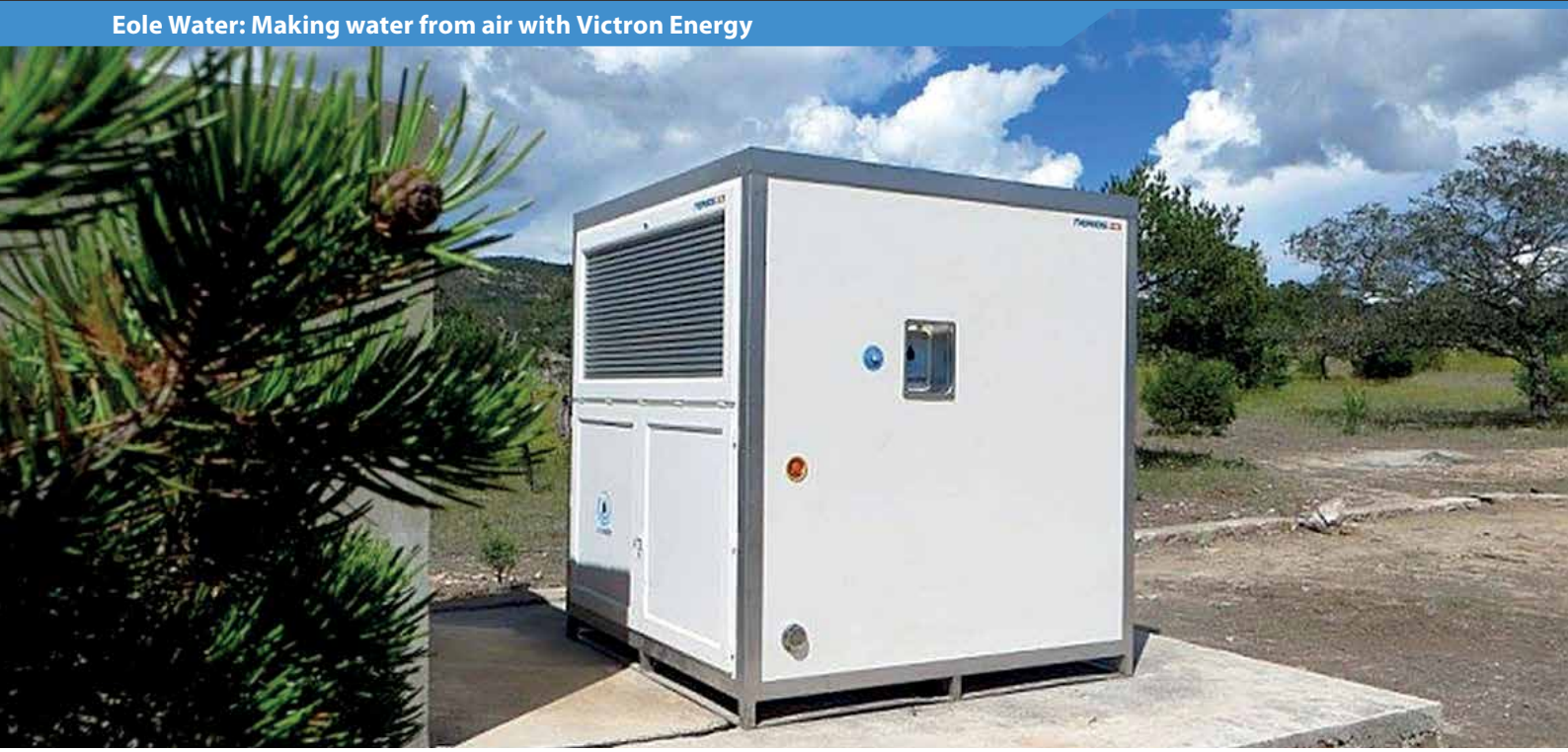

Eole Water

Eole Water is the pioneer in the field of water making systems using air as a source of water. The company has invented the first wind turbine able to create drinking water from condensed air. Today, 150 million of people worldwide live in remote areas without any access to safe drinking water. The Eole Water's mission is to provide these isolated communities with drinking water.
An atmospheric water generator (AWG) is a device that extracts water from humid ambient air. We at Victron Energy are delighted that Eole Water of France has chosen our products to assist in this process of making water from air, particularly in locations where other sources of water are scarce.

The NERIOS.S3 – A self-consumption machine

The NERIOS.S3 EVO version primarily uses standalone PV to power it. The minimum installed solar power required for self-sufficiency is 5.1kWp. The potable drinking water produced can range from 0.5l/h to 13.2l/h subject to the power used and the temperature and humidity of the air. The water tank capacity is 1,000 litres.

The EVO has three operating modes:

Primary operating mode: smart standalone machine
The machine only works with solar energy from photovoltaic panels. Following the curve of the sun (MPPT) during the day, solar photovoltaic energy feeds a variable speed cooling system that converts and stores this energy in an ice accumulator. During the night, a period which is cooler and damper, cold stored in the accumulator cools the outside air, which has been sucked in, down to its dew point, causing condensation and the formation of water.

Secondary operating mode: smart switchable machine
If a regular connection to the grid is possible, the electrical grid is used to stabilise the energy coming from the solar panels during the day (stored in the ice accumulator) and supply the energy needed at night to regulate the system.
In the event of an extended period without sun, the machine can be powered directly from the grid.

Emergency Mode: ever ready machine
In the event of a lack of water during a period without sun and without the grid, the machine can be powered by a backup generator.

Victron inside and out

Depending on the model, Eole Water uses a range of Victron Energy products inside and out in their automatic water generators:

- Autotransformers
- MultiPlus inverter/chargers
- Lithium batteries (with cell balancing and Battery Management Systems [BMS])
- BMV-700 battery monitor
- Color Control GX (for both on & off site control and monitoring)
- Solar Charge Controllers
- BlueSolar Panels
- VRM (Victron Remote Management) Portal

For further information on Eole Water projects please visit: http://www.eolewater.com/

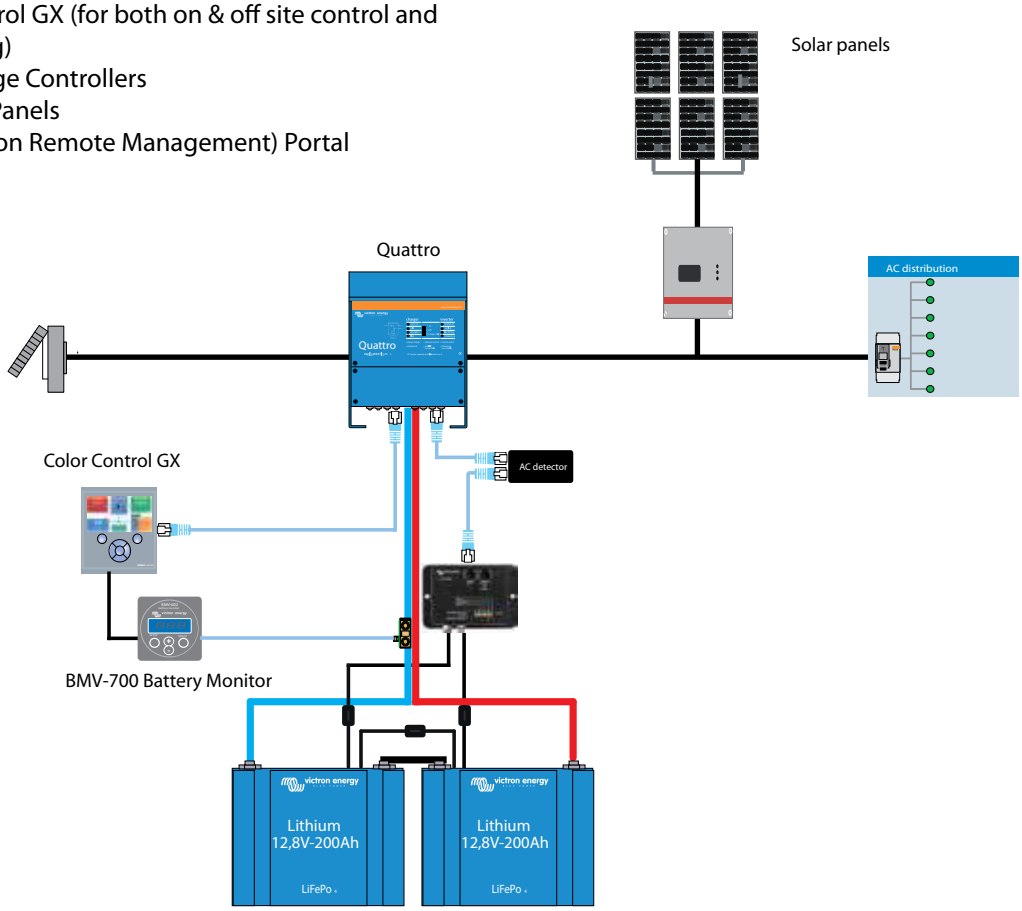

DC Systems

In DC systems solar energy is converted into regulated DC. Consequently the regulated DC is fed to the batteries and consumers. An inverter powers any AC consumers that are connected to the DC system. Unlike in DC systems, solar power is directly converted into AC in AC systems.

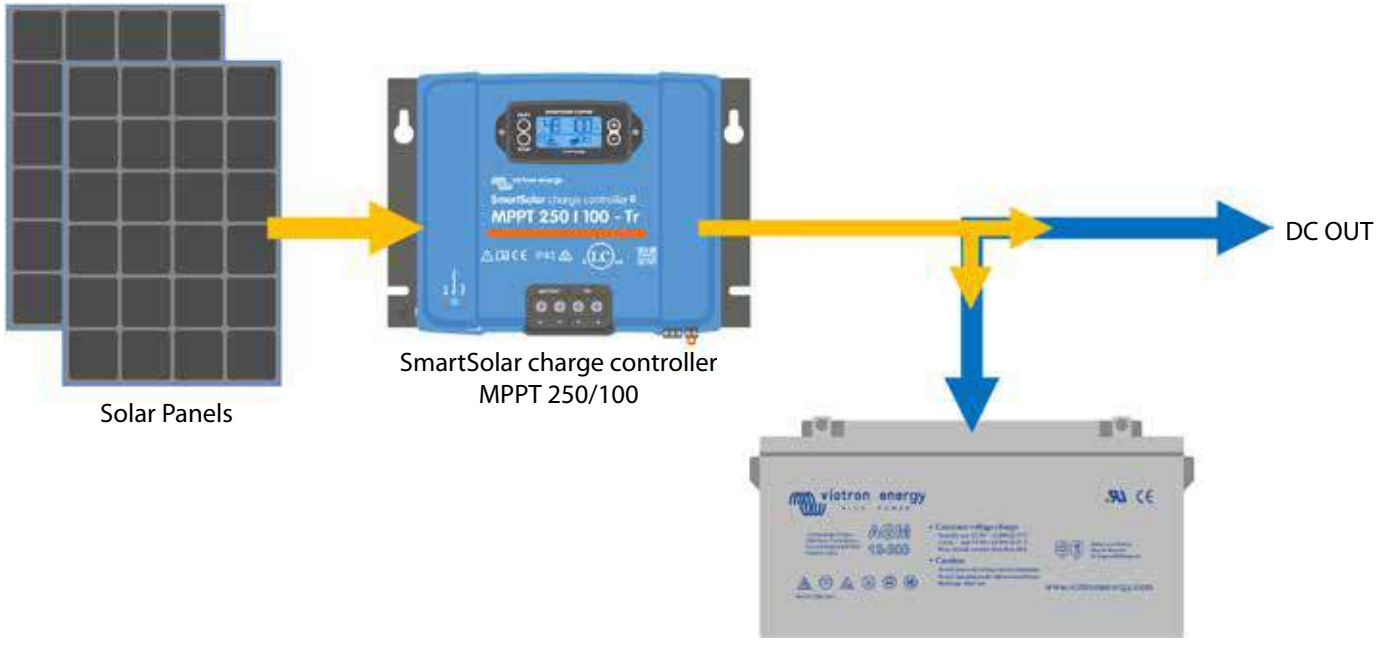

1. DC consumers

A solar panel feeds the consumers practically directly. The only item in between the panel and the power consumer is a charge controller. This BlueSolar charge controller controls the voltages for the consumers and the batteries.

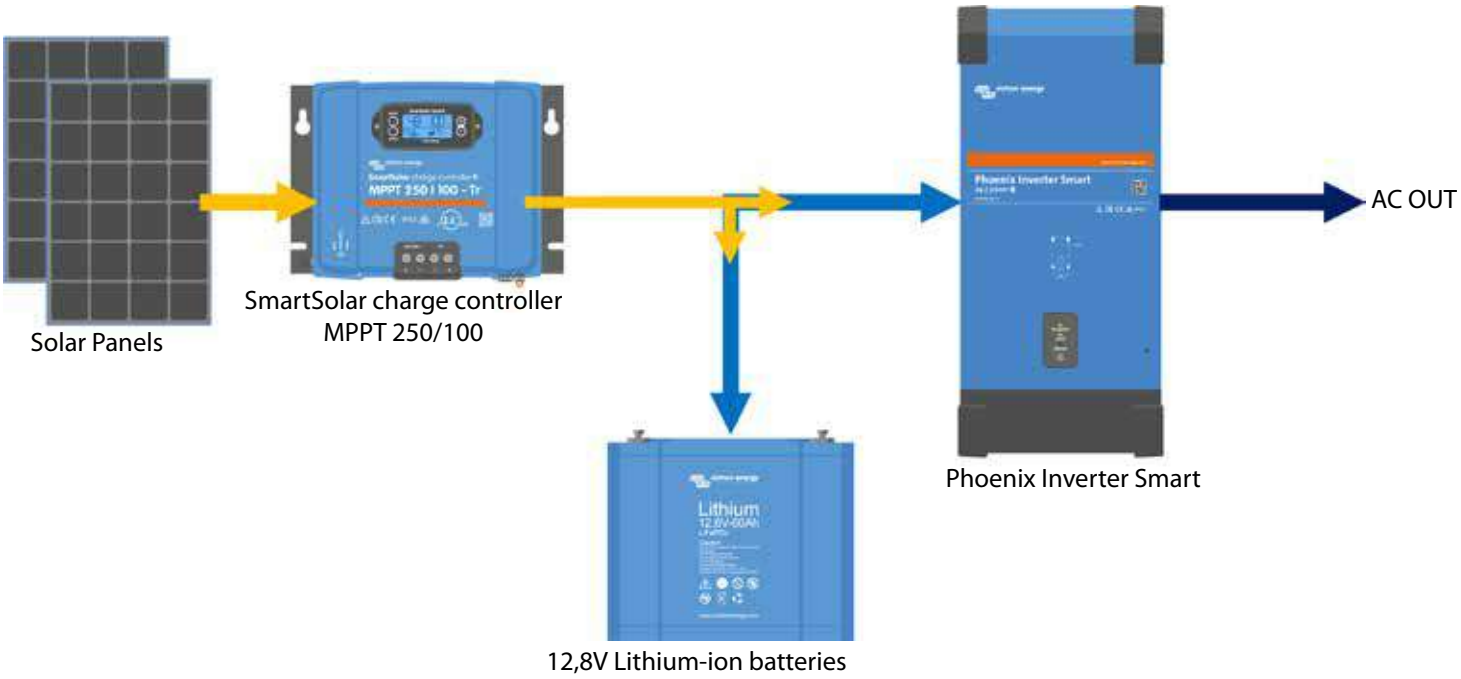

2. AC consumers

This is a DC system with a 230 Volt output for AC consumers. In above example a Victron Phoenix inverter is added to provide the AC output.

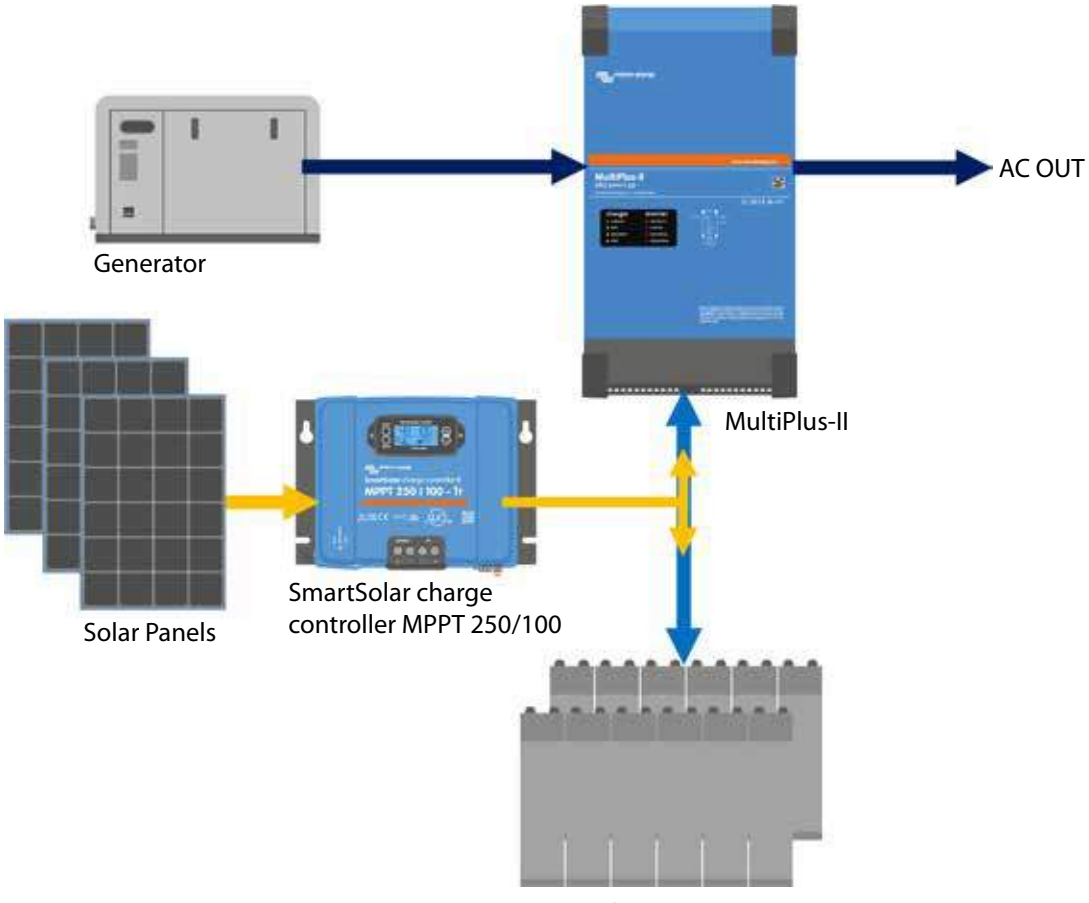

3. Not enough sun – hybrid power

If the sun isn't providing you with enough energy, a generator is added to the system. In this case a MultiPlus inverter/charger is used instead of an inverter. The generator is connected directly to the MultiPlus. The MultiPlus automatically regulates the starting and stopping of the generator, while maximizing the use of solar power and securing a long battery life.

PowerAssist – boosting the capacity of grid or generator power

This unique Victron feature allows the MultiPlus to supplement the capacity of the grid or generator power. Where peak power is so often required only for a limited period, the MultiPlus will make sure that insufficient grid or generator power is immediately compensated with power from the battery. When the load reduces, the spare power is used to recharge the battery bank.

It is therefore no longer necessary to size a generator on the maximum peak load. Use the most efficient size generator instead.

Note: this feature is available in both the MultiPlus and the Quattro.

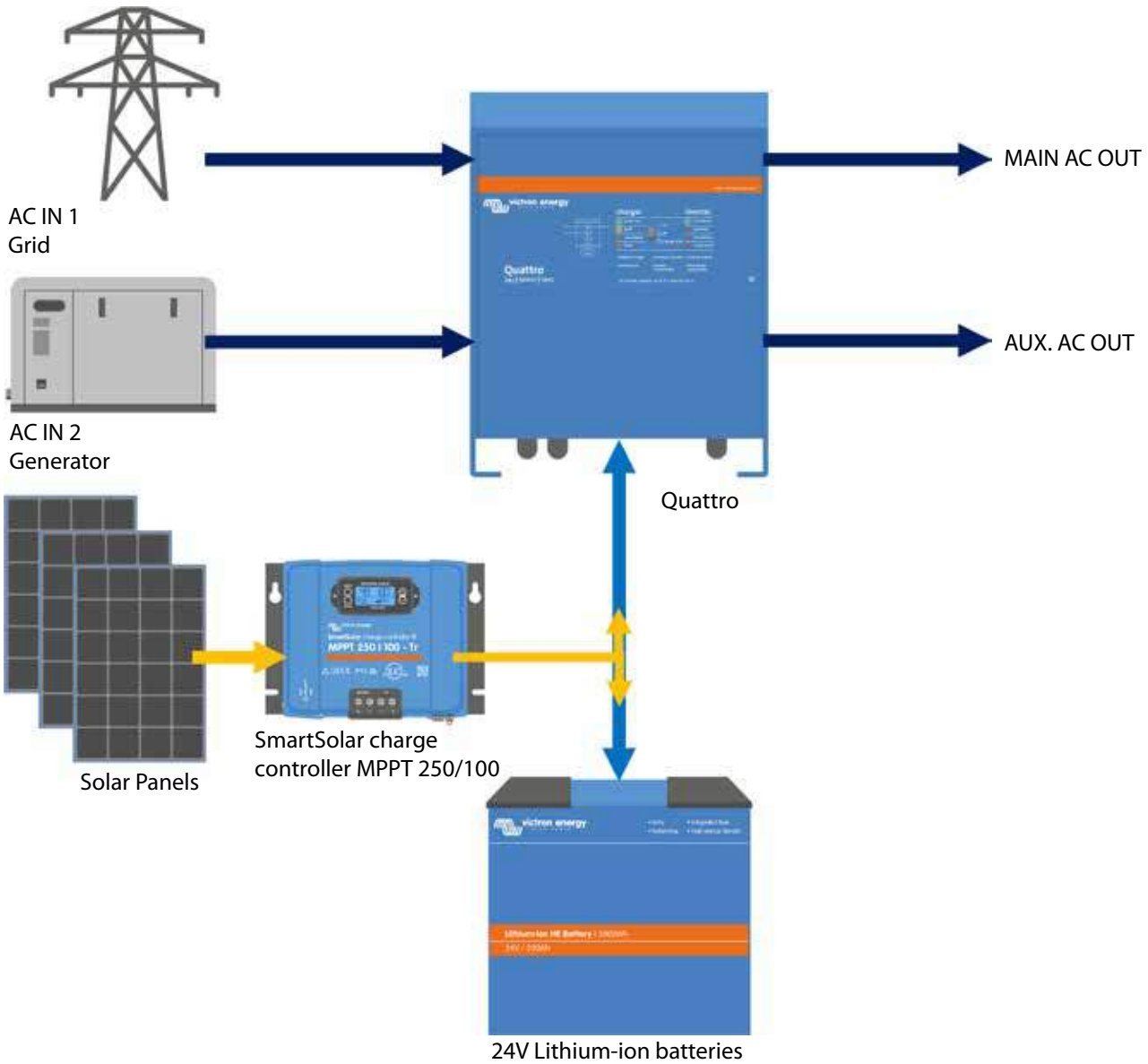

4. Backup system

Solar energy can also be combined with a grid connection. But a grid that suffers from power failures in combination with an insufficient solar supply requires support of a generator. Instead of a MultiPlus, we recommend the Quattro, which is a MultiPlus with built-in transfer switch to connect both the grid and a generator. This entirely automates the switching process between the grid and the generator.

AC Systems

For larger solar systems that generally supply to AC consumers, it is more efficient to immediately invert the solar power into AC. Therefore we call these systems "AC systems". AC systems have a higher energy efficiency in comparison to DC systems. The PV inverter directly converts the solar energy into AC. This inverter requires 'grid', which is provided for by a MultiPlus or Quattro. All excess solar power which isn't used by the AC consumers is used to charge the batteries.

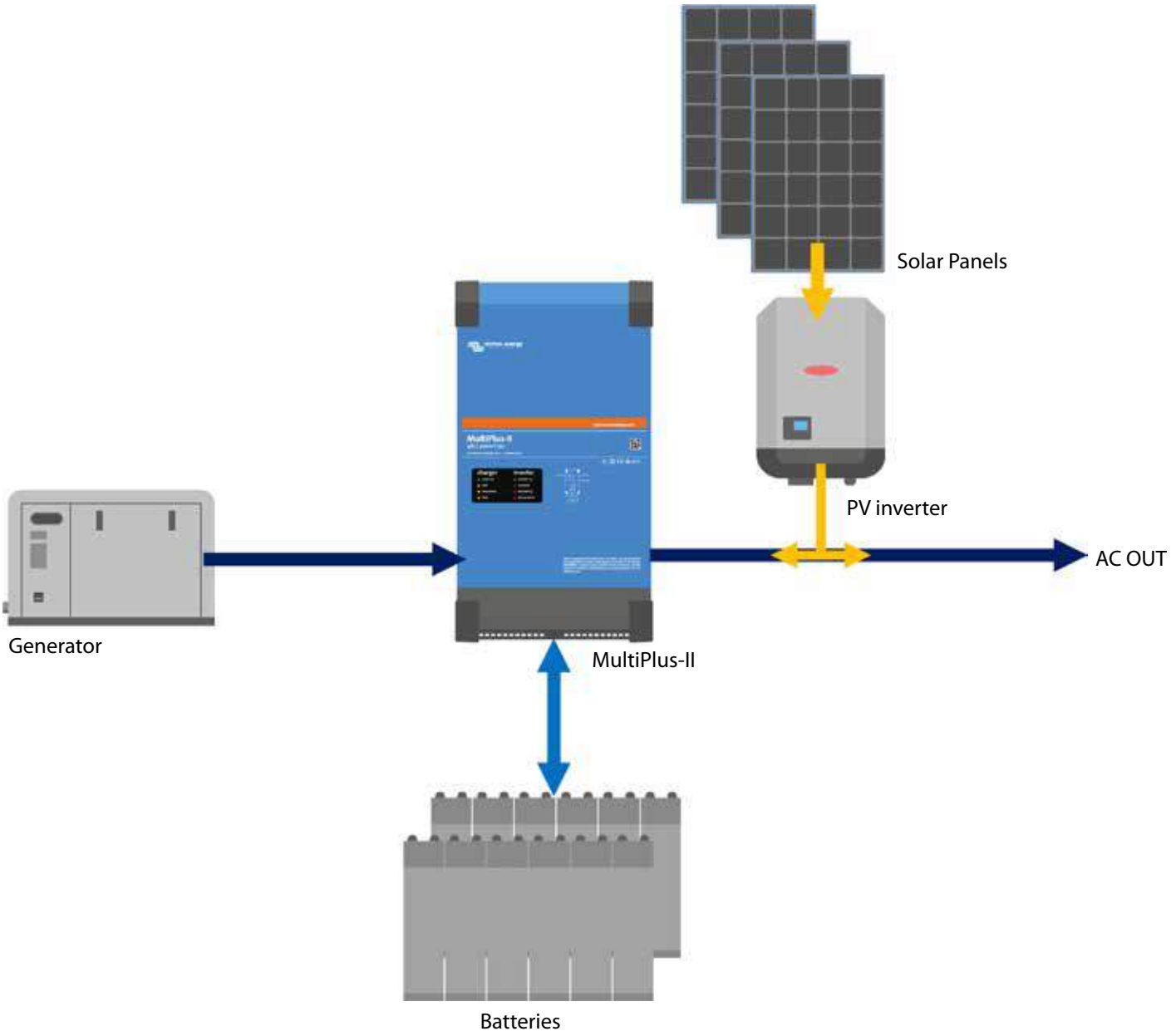

1. Island system with generator

As soon as energy is collected by the solar panels it is inverted to AC by the PV inverter. The generator supplies its alternating current directly to the MultiPlus inverter/charger. The MultiPlus will automatically start and stop the generator, while maximizing the use of solar power.

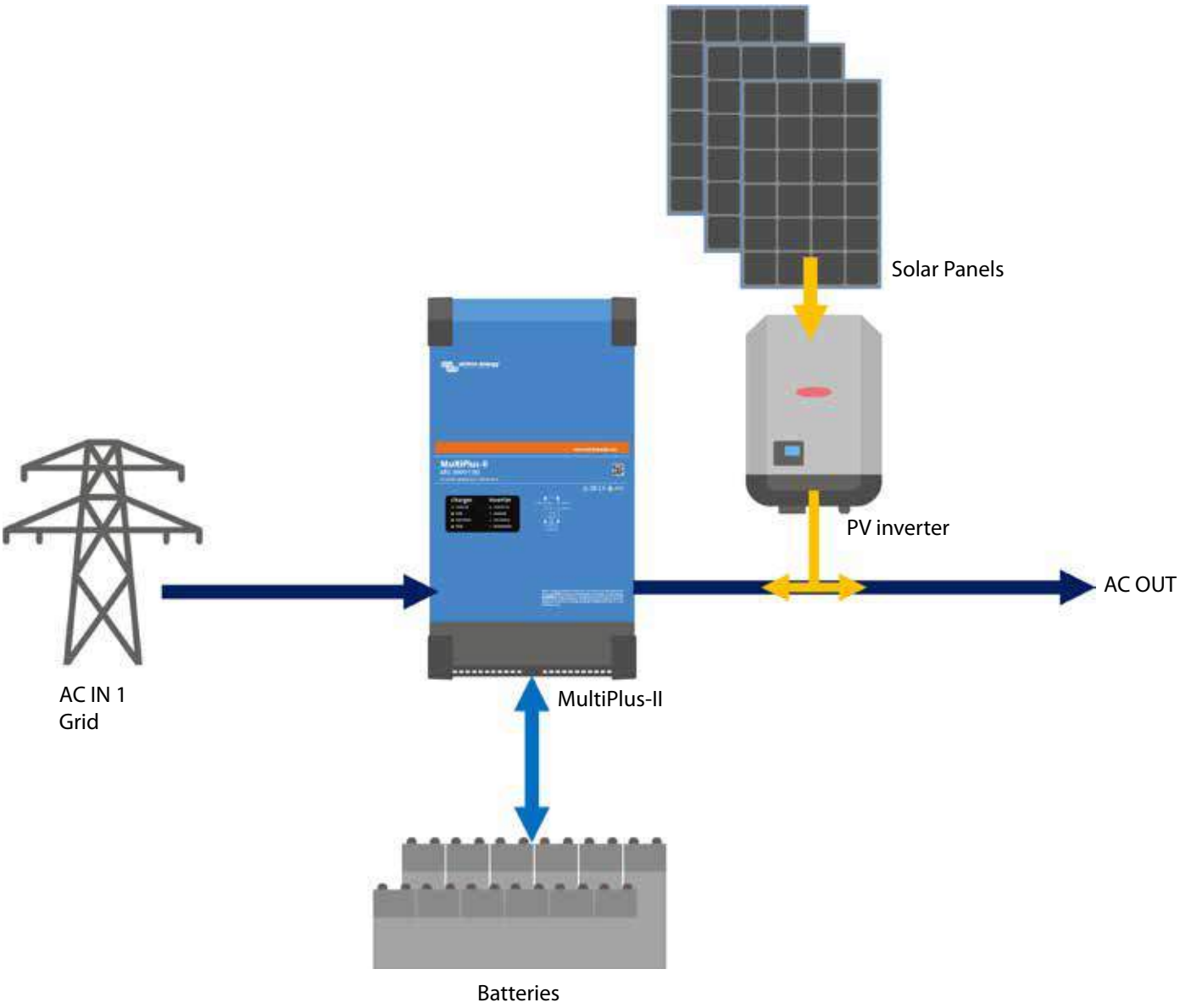

2. Solar and grid

In this backup system, AC from the grid can supplement the energy supply coming from the solar panels. And vice versa, the energy from the solar panels can cover any grid failure that may occur.

MultiPlus vs Quattro
The MultiPlus and Quattro products play a central role in both AC and DC systems. They are both powerful battery chargers and inverters in one box.

The amount of available AC sources is the deciding factor when choosing between the Quattro and the Multi.

The big difference is that a Quattro can take two AC sources, and switch between them based on intelligent rules. It has a built-in transfer switch. The MultiPlus can take only one AC source.

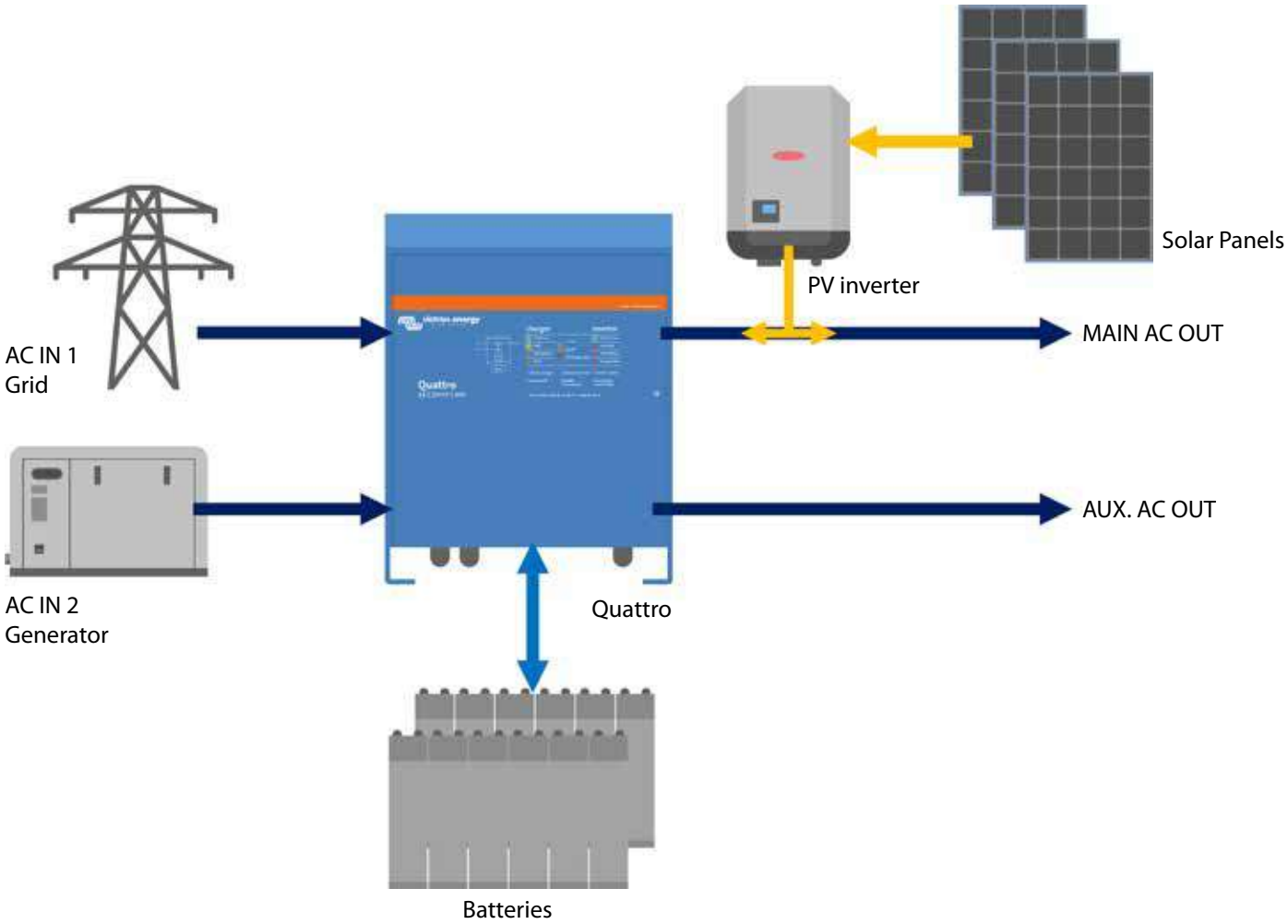

3. Solar, generator and grid
An extensive backup system such as the one illustrated here guarantees a non-stop supply of energy. If for example a grid failure occurs, the batteries are empty and at the same time there is a limited amount of solar energy available, the Quattro inverter/charger will start the generator. As soon as the generator is not needed anymore, it will be stopped automatically.

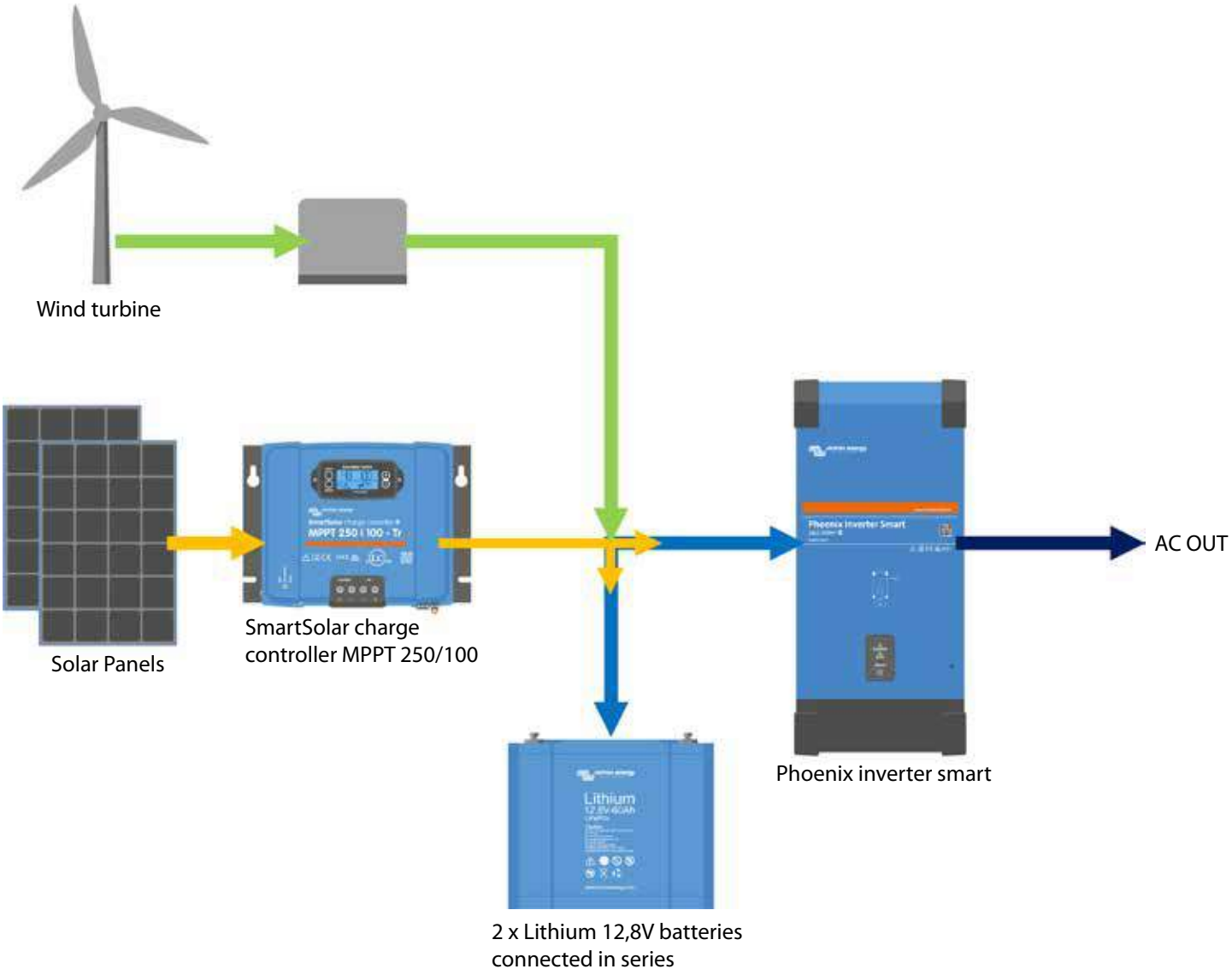

Example showing how to add other renewable energy sources via the DC.

Our systems are comprised of various components. Some of which are specifically designed for specific markets. Other Victron components are applicable to a wide range of applications. You are able to find the specifications and other detailed information about these components in the 'Technical Information' section.

Color Control GX

The Color Control GX provides intuitive control and monitoring for all products connected to it. The list of Victron products that can be connected is endless: Inverters, Multis, Quattros, MPPTs, BMV-600 series, BMV-700 series, Skylla-i, Lynx Ion and even more. The Color Control GX is now also equipped with a generator start/stop function using the internal relay.
Besides monitoring and controlling products on the Color Control GX, the information is also forwarded to our free remote monitoring website: the VRM Online Portal.

Venus GX

The Venus GX is the communication-centre of your installation. Venus allows you to talk to all components in your system and ensure they are working in harmony. Monitoring of live data, and changing settings is performed by using your smartphone (or other device) via our free-to-use Victron Remote Management Portal (VRM).

MPPT Control

The MPPT Control lets you see the status as well as setup all BlueSolar MPPT Charge Controllers that have a VE.Direct communications port. The new MPPT Control is mounted in the familiar BMV-700 series housing, maintaining a consistent and professional look to your panels and systems monitoring equipment.

Battery Monitor

Key tasks of the Victron Battery Monitor are measuring charge and discharge currents as well as calculating the state-of-charge and time-to-go of a battery. An alarm is sent when certain limits are exceeded (such as an excessive discharge). It is also possible for the battery monitor to exchange data with the Victron Global Remote. This includes sending alarms.

MPPT Wire box MC4 or Tr

The MPPT Wire box is for extra safety: without the box the MPPT is not touch-safe. There two versions of the wire box: for the MC4 or the Tr model. Both models are available in different sizes:

Wirebox	S	M	L	XL
MPPT model	**MPPT 75/10** **MPPT 75/15** **MPPT 100/15**	**MPPT 75/50** **MPPT 100/30** **MPPT 100/50** **MPPT 150/35**	**MPPT 150/45** **MPPT 150/60** **MPPT 150/70** **MPPT 250/70**	**MPPT 150/85** **MPPT 150/100** **MPPT 250/85** **MPPT 250/100**

SmartSolar Control Display

The SmartSolar Control Display is a pluggable LCD display for the SmartSolar Charge Controllers. Simply remove the rubber seal that protects the plug on the front of the controller and plug-in the display.

Smart Battery Sense

Smart Battery Sense is a wireless battery voltage and temperature sensor for Victron MPPT Solar Chargers.

With voltage and temperature sense in place, batteries will be better charged; improving charging-efficiency and prolonging battery life.

VE.Direct Bluetooth Smart dongle

Using the VE.Direct Bluetooth Smart dongle you can display your BMV or MPPT information on iOS and Android devices, using the **VictronConnect app.** View information wirelessly such as battery status and solar panel power, plus other useful data.

The dongle is able to read data from the BMV-70x series battery monitors, Phoenix Inverters with VE.Direct port, MPPT Solar Charge Controllers (except for the 150/70 and 150/85) using the VE.Direct communication port and the Blue Smart IP65 Charger.

We have a couple of tools available that make it easy for Victron distributors, installers and customers to work with Victron Energy products. Whether you want to configure and read out your Victron products with VictronConnect using your smartphone, tablet or computer or you want to show your VRM site to friends and family, it is all possible with these Victron tools.

VRM Online Portal: Remotely monitor Victron equipment

Victron Remote Management (VRM) is provided by Victron Energy to remotely monitor electrical equipment all over the world.
Once you have a VRM account you will be able to view live feed from your installation, such as generated solar energy, state of charge of your batteries and the consumption.

To get an impression of the VRM Online Portal, please visit: https://vrm.victronenergy.com and use the 'Take a look inside' button. The portal is free of charge.

VictronConnect

VictronConnect lets you get live status info and configure Victron products with built-in bluetooth support, such as the SmartSolar and the Blue Smart IP65 Charger, or using a VE.Direct Bluetooth Smart dongle or VE.Direct USB interface. Firmware updates are included inside VictronConnect.
VictronConnect is available for both Windows PCs, Max OS X, iOS and Android phones as well as tablets.
Download VictronConnect from our software page:
https://www.victronenergy.com/support-and-downloads/software#victronconnect-app

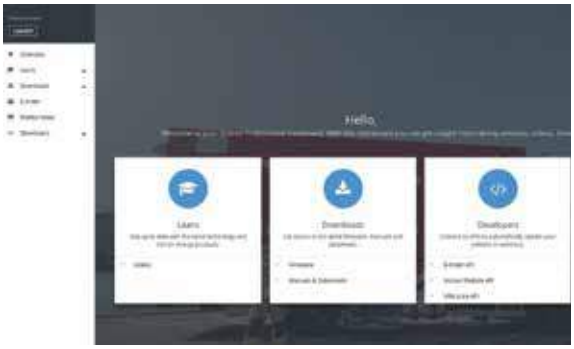

Victron Professional

Victron Professional is a new online portal, available to both distributors as well as other professionals and end users that work with Victron equipment.
With Victron Professional you can get insight into training sessions, videos, firmware files, APIs and the latest news. If you already use E-Order you can login with those credentials.

Sign up for Victron Professional here:
https://professional.victronenergy.com

VRM World: View shared VRM sites around the world

Ever wanted to show your clients, friends, colleagues how much solar energy your installation is generating or indeed any other data that you can see on your VRM site? Well now you can – using VRM World.
You need a VRM account to be able to view shared VRM sites. In your VRM portal it is possible to publicly share on VRM World.

Visit VRM World here:
https://vrm.victronenergy.com/world/

Victron Community

The Victron Community is a place for questions and answers about Victron related subjects.
https://community.victronenergy.com/

Instruction videos on Victron youtube channel

On our youtube channel you can watch Victron Energy instruction videos.

https://www.youtube.com/user/VictronEnergyBV

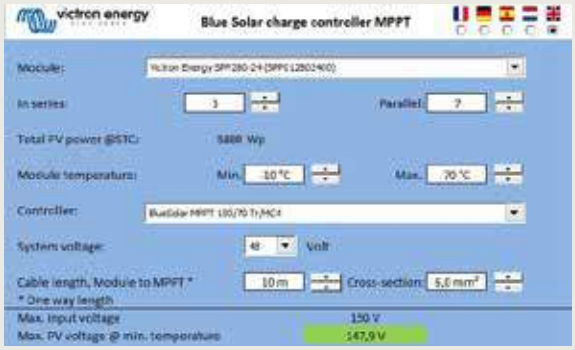

MPPT Calculator Excel sheet

With the MPPT Calculator Excel sheet you can match solar modules to MPPT charge controllers.

Download the Excel sheet from our software page:
https://www.victronenergy.com/support-and-downloads/software

Victron Energy Blog

On the Victron Energy Blog you can read about the latest news, new products and a lot of success stories with Victron Energy.

Subscribe to the Victron Energy Blog:
https://www.victronenergy.com/blog/

Victron Live

Victron Live is a living and growing website, which is a constantly evolving information store. It is a place where you can find manuals for VEConfigure3, Assistants and other software and software products.

Visit Victron Live here:
https://www.victronenergy.com/live/

The AC and DC systems which are shown in this brochure are examples of the various possibilities that Victron Energy offers. As illustrated they vary from very simple to very extensive solutions. Our products can be put in parallel, or in three-phase configurations, if the necessary power is too high for a single unit.

Easy to configure
Configuring parallel and three phase systems is easy. Our VEConfigure software tool allows the installer to put components together, without any hardware changes or DIP switches. Just using standard products.

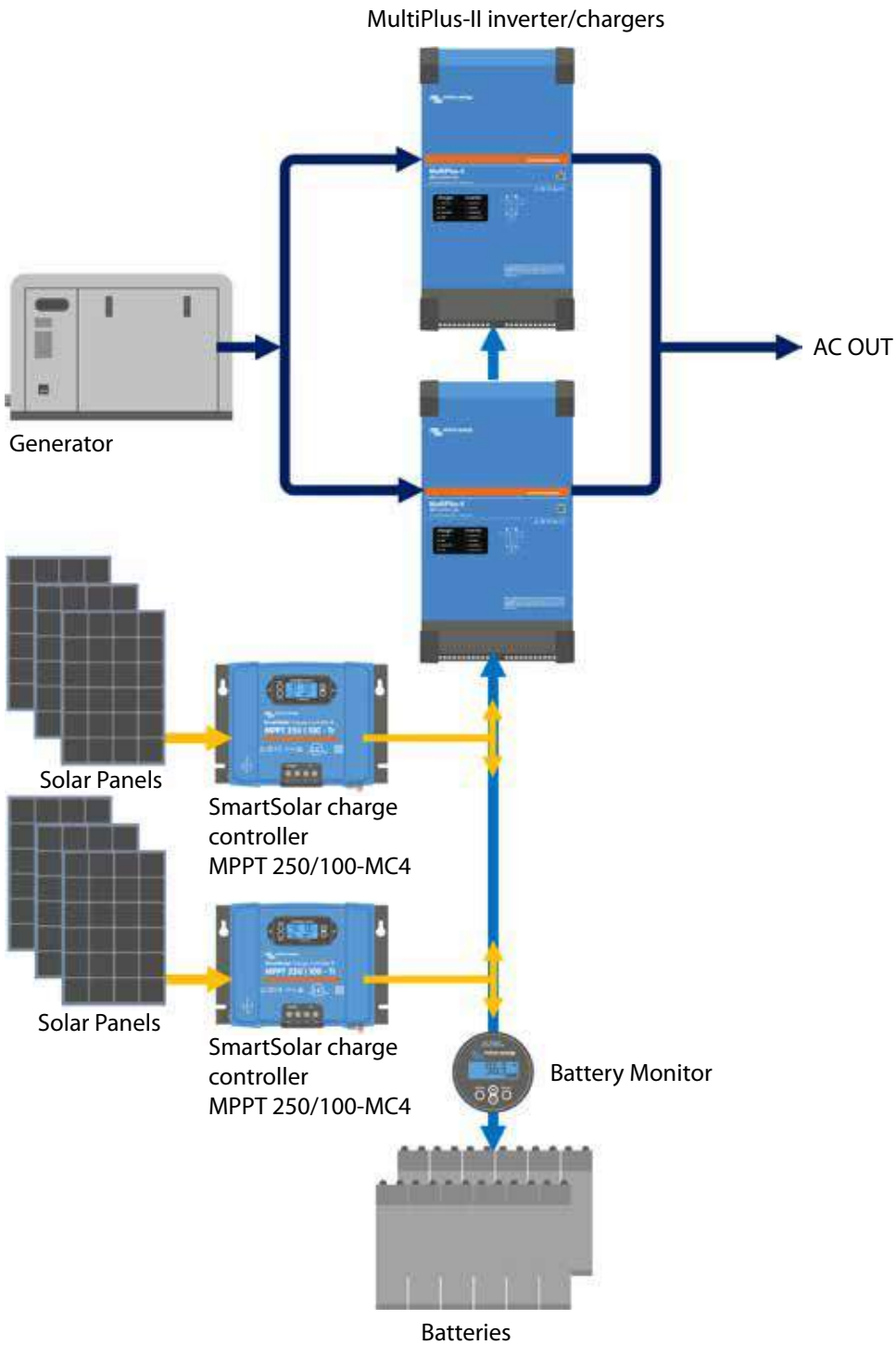

1. DC system
The illustration above shows a DC system with three charge controllers, two MultiPlus inverter/chargers configured in parallel and one generator.

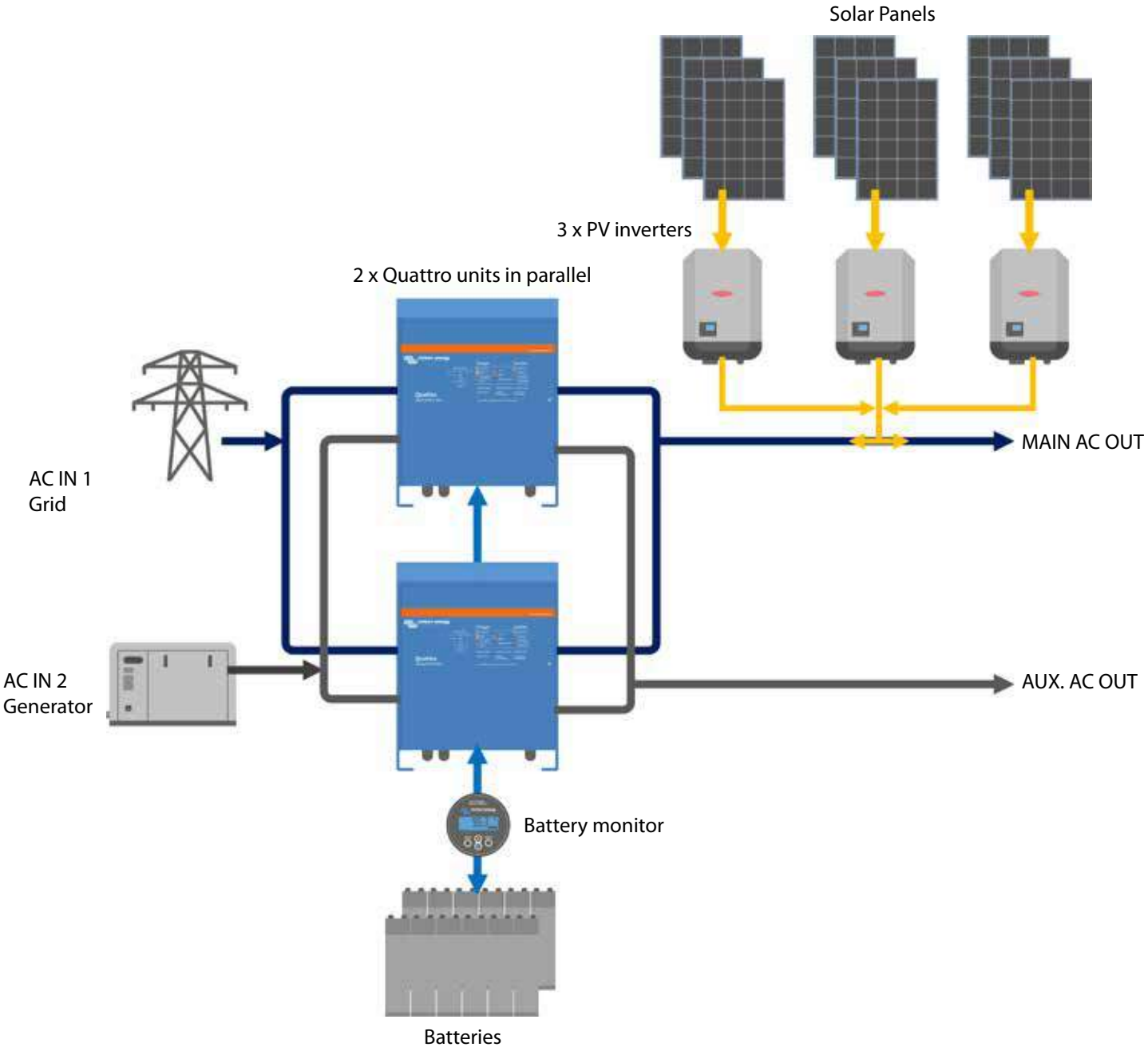

2. AC system

The illustration above shows an AC system with three PV inverters and two Quattros in parallel.

Note - for our latest datasheets please refer to our website:
www.victronenergy.com

TECHNICAL INFORMATION

EasySolar 12V and 24V, 1600VA	28
Phoenix inverters Smart 1600VA - 3000VA	32
Phoenix inverters 250VA - 1200VA 230V and 120V	34
MultiPlus inverter/charger 500VA - 1600VA	37
MultiPlus inverter/charger 800VA - 5kVA 230V	38
Quattro inverter/charger 3kVA - 15kVA 230V	40
MultiPlus-II 3kVA & 5kVA 230V	42
MultiPlus inverter/charger 2kVA and 3kVA 120V	44
Quattro inverter/charger 3kVA - 10kVA 120V	46
Skylla-i battery charger 24V	50
Skylla charger 24/48V	52
Skylla charger 24V universal input and GL approval	54
Color Control GX	56
Venus GX	60
BMV-700 series: Precision battery monitoring	62
BMV-712 Smart: Bluetooth inside	64
BlueSolar monocrystalline panels	66
BlueSolar polycrystalline panels	67
BlueSolar & Smartsolar charge controllers MPPT - Overview	68
SmartSolar charge controller MPPT 75/10, 75/15, 100/15, 100/20, 100/20_48V	69
SmartSolar charge controller MPPT 100/30 & 100/50	70
SmartSolar charge controller MPPT 150/35	71
SmartSolar charge controller MPPT 150/45 up to MPPT 150/100	72
SmartSolar charge controller MPPT 250/60 up to MPPT 250/100	73
BlueSolar PWM-Light charge controllers 12/24V	74
BlueSolar PWM-Pro charge controller	75
Battery Balancer	76
Telecom batteries	78
OPzS Solar batteries	79
A new AGM battery: the AGM Super Cycle battery	80
Gel and AGM batteries	82
12,8 & 25,6 Volt lithium-Ion Phosphate Batteries Smart - With Bluetooth	86
VE.Bus BMS	88
24V 180Ah Lithium-ion battery and Lynx-ion	90
Lithium-Ion HE Battery and Lynx Ion BMS	92

leine elektrische
apparaten
Aardewerk,
Serviesgoed
al is geschiedenis,
ndstoffen zijn de toekomst!

All-in-one solar power solution
The EasySolar combines a MPPT solar charge controller, an inverter/charger and AC distribution in one enclosure.
The product is easy to install, with a minimum of wiring.

The solar charge controller: Blue Solar MPPT 100/50
Up to three strings of PV panels can be connected to three sets of MC4 (PV-ST01) PV connectors.

The inverter/charger: MultiPlus Compact 12/1600/70 or 24/1600/40
The MPPT charge controller and the MultiPlus Compact inverter/charger share the DC battery cables (included). The batteries can be charged with solar power (BlueSolar MPPT) and/or with AC power (inverter/charger) from the utility grid or a genset.

AC distribution
The AC distribution consists of a RCD (30 mA/16 A) and four AC outputs protected by two 10A and two 16A circuit breakers.
One 16A output is controlled by the AC input: it will switch on only when AC is available.

PowerAssist
Unique PowerAssist technology protects the utility or generator supply from being overloaded by adding extra inverter power when needed.

Unique solar application software
Several software programs (Assistants) are available to configure the system for various grid interactive or stand-alone applications. Please see
http://www.victronenergy.nl/support-and-downloads/software/

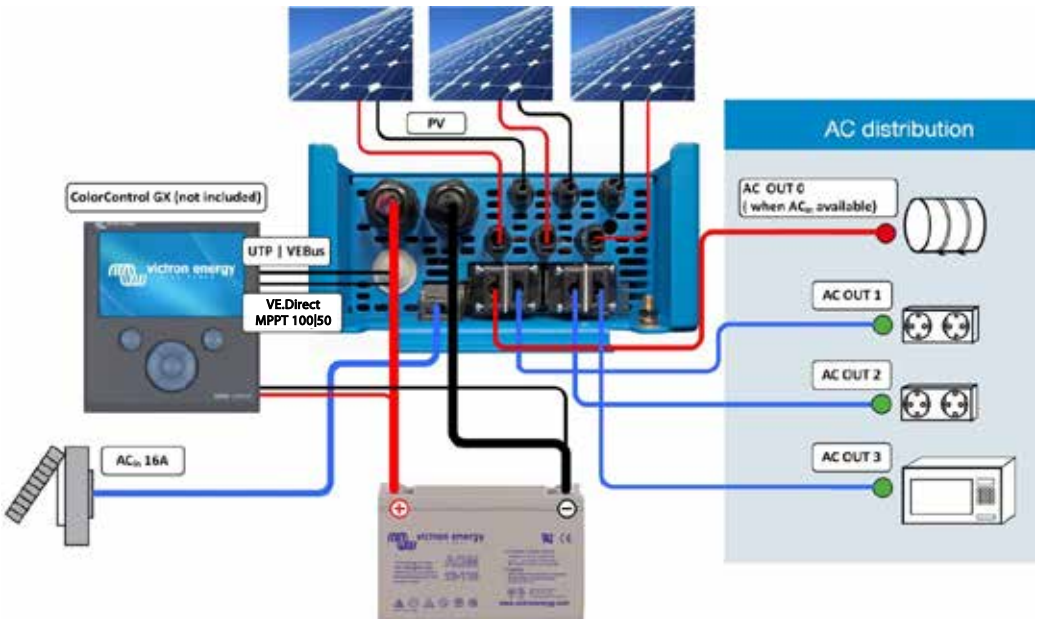

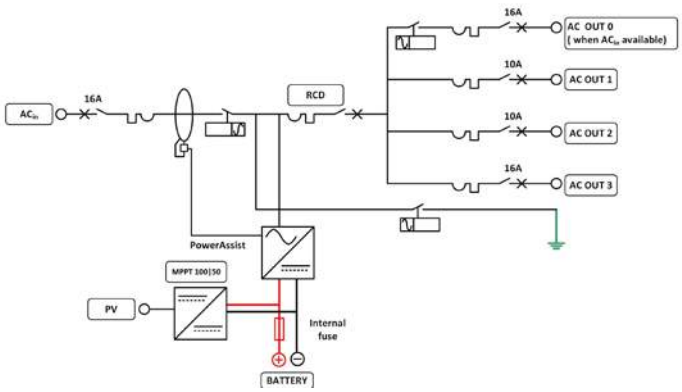

EasySolar	EasySolar 12/1600/70	EasySolar 24/1600/40
Inverter/charger		
Transfer switch	16A	
INVERTER		
Input voltage range	9,5 – 17V	19 – 33V
'Heavy duty' output AC 0	16A	
Output AC1, 2, 3	Output voltage: 230 VAC ± 2% Frequency: 50 Hz ± 0,1% (1)	
Cont. output power at 25°C (3)	1600VA / 1300W	
Cont. output power at 40°C	1200W	
Peak power	3000W	
Maximum efficiency	92%	94%
Zero load power	8W	10W
Zero load power in search mode	2W	3W
CHARGER		
AC Input	Input voltage range: 187-265VAC Input frequency: 45 – 65Hz Power factor: 1	
Charge voltage 'absorption'	14,4V	28,8V
Charge voltage 'float'	13,8V	27,6V
Storage mode	13,2V	26,4V
Charge current house battery (4)	70A	40A
Charge current starter battery (A)	4	
Battery temperature sensor	Yes	
Programmable relay (5)	Yes	
Protection (2)	a – g	
Solar Charge Controller		
Model	MPPT 100/50	
Maximum output current	50A	
Maximum PV power, 6a,b)	700W	1400W
Maximum PV open circuit voltage	100V	100V
Maximum efficiency	98%	
Self-consumption	10 mA	
Charge voltage 'absorption', default setting	14,4V	28,8V
Charge voltage 'float', default setting	13,8V	27,6V
Charge algorithm	multi-stage adaptive	
Temperature compensation	-16mV/°C	-32mV/°C
Protection	a - g	
COMMON CHARACTERISTICS		
Operating temp. range	-20 to +50°C (fan assisted cooling)	
Humidity (non-condensing):	max 95%	
ENCLOSURE		
Material & Colour	aluminium (blue RAL 5012)	
Protection category	IP 21	
Battery-connection	Battery cables of 1.5 meter	
PV connection	Three sets of MC4 (PV-ST01) PV connectors.	
230 V AC-connection	G-ST18i connector	
Weight	15kg	
Dimensions (hxwxd)	745 x 214 x 110mm	
STANDARDS		
Safety	EN 60335-1, EN 60335-2-29, EN 62109	
Emission / Immunity	EN 55014-1, EN 55014-2, EN 61000-3-3	
Automotive Directive	2004/104/EC	

1) Can be adjusted to 60Hz and to 240V
2) Protection
a. Output short circuit
b. Overload
c. Battery voltage too high
d. Battery voltage too low
e. Temperature too high
f. 230 VAC on inverter output
g. Input voltage ripple too high

3) Non-linear load, crest factor 3:1
4) At 25°C ambient
5) Programmable relay which can be set for general alarm, DC under voltage or genset start signal function
6a) If more PV power is connected, the controller will limit input power to 700W resp. 1400W
6b) PV voltage must exceed Vbat + 5V for the controller to start. Thereafter minimum PV voltage is Vbat + 1V

EasySolar 3kVA & 5kVA with Color Control panel

EasySolar 3 kVA

The all-in-one solar power solution

The EasySolar combines a MPPT solar charge controller, an inverter/charger and AC distribution in one enclosure.
The product is easy to install, with a minimum of wiring.

Color Control panel

Two outstanding functions:
- Prioritizes battery charging by the MPPT charge controller
- Connects to the internet, enabling remote monitoring (VRM website) and remote control.

AC distribution

The AC distribution consists of a RCD (30mA / 63A) and four AC outputs protected by two 10A and two 16A circuit breakers.
An additional 16A output is controlled by the AC input: it will switch on only when AC is available.

PowerAssist

Unique PowerAssist technology protects the utility or generator supply from being overloaded by adding extra inverter power when needed.

Unique solar application software

Several software programs (Assistants) are available to configure the system for various grid interactive or stand-alone applications. Please see
http://www.victronenergy.nl/support-and-downloads/software/

EasySolar 5 kVA

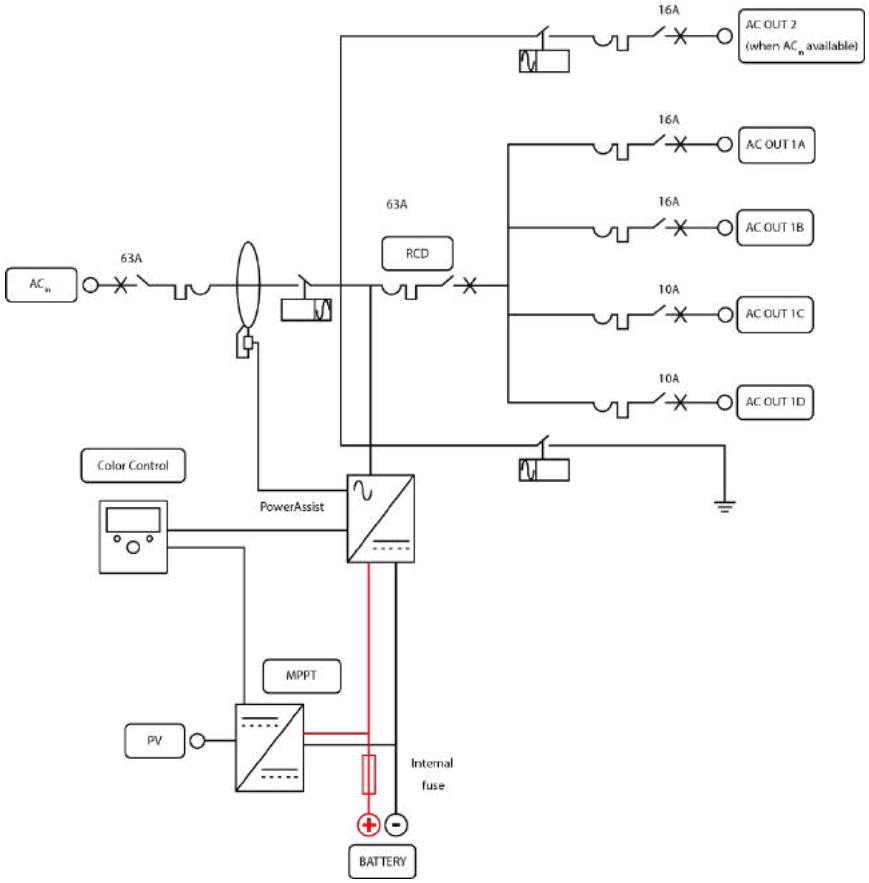

EasySolar	EasySolar 24/3000/70-50 MPPT150/70	EasySolar 48/3000/35-50 MPPT150/70	EasySolar 48/5000/70-100 MPPT150/100
INVERTER/CHARGER			
Transfer switch	50A	50A	100A
INVERTER			
Input voltage range	19 – 33V	38 – 66V	38 – 66V
'Heavy duty' output AC 2	16 A		
Output AC 1a, 1b, 1c, 1d	Output voltage: 230VAC ± 2% Frequency: 50 Hz ± 0,1% (1)		
Cont. output power at 25°C (3)	3000VA / 2400W	3000VA / 2400W	5000VA / 4000W
Cont. output power at 40°C	2200W	2200W	3700W
Cont. output power at 65°C	1700W	1700W	3000W
Peak power	6000W	6000W	10000W
Maximum efficiency	94%	95%	95%
Zero load power	20W	25W	35W
Zero load power in search mode	10W	12W	15W
CHARGER			
AC Input	Input voltage range: 187-265 VAC Input frequency: 45 – 65 Hz Power factor: 1		
Charge voltage 'absorption'	28,8V	57,6V	57,6V
Charge voltage 'float'	27,6V	55,2V	55,2V
Storage mode	26,4V	52,8V	52,8V
Charge current	70A	35A	70A
Battery temperature sensor	yes		
Programmable relay (5)	yes		
Protection (2)	a - g		
SOLAR CHARGE CONTROLLER			
Model	MPPT 150/70-MC4	MPPT 150/70-MC4	MPPT 150/100-MC4
Maximum output current (4)	70A	70A	100A
Maximum PV power	2000W	4000W	5800W
Maximum PV open circuit voltage	150V		
Maximum efficiency	98%		
Self-consumption	10mA		
Charge voltage 'absorption', default setting	28,8V	57,6V	57,6V
Charge voltage 'float', default setting	27,6V	55,2V	55,2V
Charge algorithm	multi-stage adaptive		
Temperature compensation	-16 mV / °C	-32 mV / °C	-64 mV / °C
Protection	a – g		
COMMON CHARACTERISTICS			
Operating temp. range	-40 to +65°C (fan assisted cooling)		
Humidity (non-condensing):	max 95%		
ENCLOSURE			
Material & Colour	aluminium (blue RAL 5012)		
Protection category	IP 21		
Battery-connection	Four M8 bolts (2 plus and 2 minus connections)		
PV connection	Two sets of MC4 PV connectors.		Three sets of MC4 PV connectors
230 V AC-connection	Screw terminals 13 mm^2 (6 AWG)		
Weight	28kg	28kg	48kg
Dimensions (hxwxd)	810 x 258 x 218	810 x 258 x 218	877 x 328 x 241
STANDARDS			
Safety	EN 60335-1, EN 60335-2-29, EN 62109-1		
Emission / Immunity	EN 55014-1, EN 55014-2, EN 61000-3-3, EN 61000-6-3, EN 61000-6-2, EN 61000-6-1		
Anti-islanding	See our website		

1) Can be adjusted to 60Hz and to 240V
2) Protection:
a. Output short circuit
b. Overload
c. Battery voltage too high
d. Battery voltage too low
e. Temperature too high
f. 230 VAC on inverter output
g. Input voltage ripple too high

3) Non-linear load, crest factor 3:1
4) At 25°C ambient
5) Programmable relay which can be set for general alarm, DC under voltage or genset start signal function

Phoenix Inverter Smart 12/2000

Bluetooth built-in: fully configurable with a tablet or smartphone

- Low battery voltage alarm
- Low battery voltage cut-off and restart levels
- Dynamic cut-off: load dependent cut-off level
- Output voltage: 210 - 245V
- Frequency: 50 Hz or 60 Hz
- ECO mode on/off and ECO mode sense level
- Alarm relay

Monitoring:

- In- and output voltage, load and alarms

VE.Direct communication port

The VE.Direct port can be connected to a computer (VE.Direct to USB interface cable needed) to configure and monitor the same parameters.

Proven reliability

The full bridge plus toroidal transformer topology has proven its reliability over many years. The inverters are short circuit proof and protected against overheating, whether due to overload or high ambient temperature.

High start-up power

Needed to start loads such as power converters for LED lamps, halogen lamps or electric tools.

ECO mode

When in ECO mode, the inverter will switch to standby when the load decreases below a preset value. Once in standby the inverter will switch on for a short period every 2,5 seconds (adjustable).
If the load exceeds the preset level, the inverter will remain on.

Remote on/off

A remote on/off switch or relay contact can be connected to a two pole connector. Alternatively, the H terminal (left) of the two pole connector can be switched to battery plus, or the L terminal (right) of the two pole connector can be switched to battery minus (or the chassis of a vehicle, for example).

LED diagnosis

Please see manual for a description.

To transfer the load to another AC source: the automatic transfer switch

For our low power inverters we recommend our Filax Automatic Transfer Switch. The Filax features a very short switchover time (less than 20 milliseconds) so that computers and other electronic equipment will continue to operate without disruption. Alternatively use a MultiPlus with built-in transfer switch.

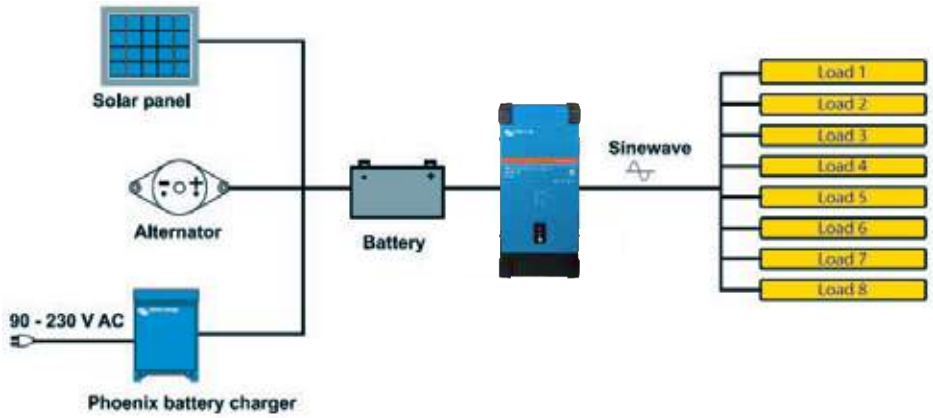

Phoenix Inverter Smart	12/1600 24/1600 48/1600	12/2000 24/2000 48/2000	12/3000 24/3000 48/3000
Parallel and 3-phase operation	No		
INVERTER			
Input voltage range (1)	9,3 – 17V 18,6 – 34V 37,2 – 68V		
Output	Output voltage: 230VAC ±2% 50 Hz or 60Hz ± 0,1% (1)		
Cont. output power at 25ºC (2)	1600VA	2000VA	3000VA
Cont. output power at 25ºC	1300W	1600W	2400W
Cont. output power at 40ºC	1200W	1450W	2200W
Cont. output power at 65ºC	800W	1000W	1700W
Peak power	3000VA	4000VA	6000VA
Dynamic (load dependent) DC low shut down (fully configurable)	Dynamic cut-off, see https://www.victronenergy.com/live/ve.direct:phoenix-inverters-dynamic-cutoff		
Max. efficiency 12/ 24 /48 V	92 / 94 / 94%	92 / 94 / 94%	93 / 94 / 95%
Zero load power 12 / 24 / 48 V	8 / 9 / 11W	8 / 9 / 11W	12 / 13 / 15W
Zero load power in ECO mode	0,6 / 1,3 / 2,1W	0,6 / 1,3 / 2,1W	1,5 / 1,9 / 2,8W
GENERAL			
Programmable relay (2)	Yes		
Stop & start power ECO-mode	adjustable		
Protection (3)	a - g		
Bluetooth wireless communication	For remote monitoring and system integration		
VE.Direct communication port	For remote monitoring and system integration		
Remote on-off	Yes		
Common Characteristics	Operating temperature range: -40 to +65ºC (fan assisted cooling) Humidity (non-condensing): max 95%		
ENCLOSURE			
Common Characteristics	Material & Colour: steel (blue RAL 5012; and black RAL 9017) Protection category: IP21		
Battery-connection	M8 bolts	M8 bolts	2+2 M8 bolts
230 V AC-connection	Screw terminals		
Weight	12kg	13kg	19kg
Dimensions (hxwxd)	485 x 219 x 125mm	485 x 219 x 125mm	533 x 285 x 150mm (12V) 485 x 285 x 150mm (24V/48V)
STANDARDS			
Safety	EN 60335-1		
Emission Immunity	EN 55014-1 / EN 55014-2/ EN-IEC 61000-6-1 / EN-IEC 61000-6-2 / EN-IEC 61000-6-3		
Automotive Directive	ECE R10-5		

1) Non-linear load, crest factor 3:1
2) Programmable relay that can a.o. be set for general alarm, DC under voltage or genset start/stop function.
AC rating: 230 V / 4 A
DC rating: 4 A / 35 VDC, 1A / 60VDC

3) Protection key:
a) output short circuit
b) overload
c) battery voltage too high
d) battery voltage too low
e) temperature too high
f) 230 V AC on inverter output
g) input voltage ripple too high

Phoenix Inverter Control
This panel is intended for remote on/off control of all Phoenix inverters Smart

Color Control GX and other GX devices
Provides monitoring and control.
Locally, and remotely on the VRM Portal.

VE.Direct to USB interface
Connects to a USB port.

Bluetooth wireless communication
Connects to a smart phone (both iOS and Android).

BMV-712 Smart Battery Monitor
The BMV Battery Monitor features an advanced microprocessor control system combined with high resolution measuring systems for battery voltage and charge/discharge current. Besides this, the software includes complex calculation algorithms, like Peukert's formula, to exactly determine the state of charge of the battery. The BMV selectively displays battery voltage, current, consumed Ah or time to go. The monitor also stores a host of data regarding performance and use of the battery.

Phoenix 12/375 VE.Direct

Phoenix 12/375 VE.Direct

VE.Direct communication port

The VE.Direct port can be connected to:

- A computer (VE.Direct to USB interface cable needed)
- Apple and Android smartphones, tablets, MacBook's and other devices (VE.Direct Bluetooth Smart dongle needed)

Fully configurable:

- Low battery voltage alarm trip and reset levels
- Low battery voltage cut-off and restart levels
- Dynamic cut-off: load dependent cut-off level
- Output voltage 210 - 245V
- Frequency 50 Hz or 60 Hz
- ECO mode on/off and ECO mode sense level

Monitoring:

- In- and output voltage, % load and alarms

Proven reliability

The full bridge plus toroidal transformer topology has proven its reliability over many years.
The inverters are short circuit proof and protected against overheating, whether due to overload or high ambient temperature.

High start-up power

Needed to start loads such as power converters for LED lamps, halogen lamps or electric tools.

ECO mode

When in ECO mode, the inverter will switch to standby when the load decreases below a preset value (min load: 15W). Once in standby the inverter will switch on for a short period (adjustable, default: every 2,5 seconds). If the load exceeds a preset level, the inverter will remain on.

Remote on/off

A remote on/off switch can be connected to a two-pole connector, or between battery plus and the left-hand contact of the two-pole connector.

LED diagnosis

Please see manual for a description.

To transfer the load to another AC source: the automatic transfer switch

For our low power inverters, we recommend our Filax Automatic Transfer Switch. The Filax features a very short switchover time (less than 20 milliseconds) so that computers and other electronic equipment will continue to operate without disruption.

Available with different output sockets

Schuko	UK	AU/NZ	IEC-320 (male plug included)	Nema 5-15R
	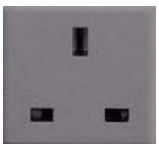			

DC connection with screw terminals

No special tools needed for installation

Phoenix Inverter 12 Volt / 24 Volt / 48 Volt	12/250 24/250 48/250	12/375 24/375 48/375	12/500 24/500 48/500	12/800 24/800 48/800	12/1200 24/1200 48/1200
Cont. power at 25°C (1)	250VA	375VA	500VA	800VA	1200VA
Cont. power at 25°C / 40°C	200 / 175W	300 / 260W	400 / 350W	650 / 560W	1000 / 850W
Peak power	400W	700W	900W	1500W	2200W
Output AC voltage / frequency (adjustable)	230VAC or 120VAC +/- 3% 50Hz or 60Hz +/- 0,1%				
Input voltage range	9,2 - 17 / 18,4 - 34,0 / 36,8 - 62,0V				
DC low shut down (adjustable)	9,3 / 18,6 / 37,2V				
Dynamic (load dependent) DC low shut down (fully configurable)	Dynamic cut-off, see https://www.victronenergy.com/live/ve.direct:phoenix-inverters-dynamic-cutoff				
DC low restart and alarm (adjustable)	10,9 / 21,8 / 43,6V				
Battery charged detect (adjustable)	14,0 / 28,0 / 56,0V				
Max. efficiency	87 / 88 / 88%	89 / 89 / 90%	90 / 90 / 91%	90 / 90 / 91%	91 / 91 / 92%
Zero-load power	4,2 / 5,2 / 7,9W	5,6 / 6,1 / 8,5W	6 / 6,5 / 9W	6,5 / 7 / 9,5W	7 / 8 / 10W
Default zero-load power in ECO mode (default retry interval: 2,5 s, adjustable)	0,8 / 1,3 / 2,5W	0,9 / 1,4 / 2,6W	1 / 1,5 / 3,0W	1 / 1,5 / 3,0W	1 / 1,5 / 3,0W
ECO mode stop and start power setting	Adjustable				
Protection (2)	a - f				
Operating temperature range	-40 to +65°C (fan assisted cooling) Derate 1,25% per °C above 40°C				
Humidity (non-condensing)	max 95%				
ENCLOSURE					
Material & Colour	Steel chassis and plastic cover (blue Ral 5012)				
Battery-connection	Screw terminals				
Maximum cable cross-section	10mm² / AWG8	10mm² / AWG8	10mm² / AWG8	25 / 10 / 10mm² / AWG4 / 8 / 8	35 / 25 / 25mm² / AWG2 / 4 / 4
Standard AC outlets	230V: Schuko (CEE 7/4), IEC-320 (male plug included) UK (BS 1363), AU/NZ (AS/NZS 3112) 120V: Nema 5-15R				
Protection category	IP 21				
Weight	2,4kg / 5,3lbs	3,0kg / 6,6lbs	3,9kg / 8.5lbs	5,5kg / 12lbs	7,4kg / 16,3lbs
Dimensions (h x w x d, mm) (h x w x d, inch)	86 x 165 x 260 3.4 x 6.5 x 10.2	86 x 165 x 260 3.4 x 6.5 x 10.2	86 x 172 x 275 3,4 x 6,8 x 10,8	105 x 216 x 305 4.1 x 8.5 x 12.1 (12V model: 105 x 230 x 325)	117 x 232 x 327 4.6 x 9.1 x 12.9 (12V model: 117 x 232 x 362)
ACCESSORIES					
Remote on-off	Yes				
Automatic transfer switch	Filax				
STANDARDS					
Safety	EN-IEC 60335-1 / EN-IEC 62109-1				
EMC	EN 55014-1 / EN 55014-2 / IEC 61000-6-1 / IEC 61000-6-2 / IEC 61000-6-3				
Automotive Directive	ECE R10-4				

1) Nonlinear load, crest factor 3:1
2) Protection key:
   a) output short circuit
   b) overload
   c) battery voltage too high
   d) battery voltage too low
   e) temperature too high
   f) DC ripple too high

Battery Alarm
An excessively high or low battery voltage is indicated by an audible and visual alarm, and a relay for remote signalling.

VE.Direct Bluetooth Smart dongle (must be ordered separately)

BMV Battery Monitor
The BMV Battery Monitor features an advanced microprocessor control system combined with high resolution measuring systems for battery voltage and charge/discharge current. Besides this, the software includes complex calculation algorithms to exactly determine the state of charge of the battery. The BMV selectively displays battery voltage, current, consumed Ah or time to go. The monitor also stores a host of data regarding performance and use of the battery.

Phoenix 12 | 375
ARESS

Proven reliability
The full bridge plus toroidal transformer topology has proven its reliability over many years.
The inverter is short circuit proof and protected against overheating, whether due to overload or high ambient temperature.

PowerControl - Dealing with limited generator, shore side or grid power
With the Multi Control Panel a maximum generator or shore current can be set. The MultiPlus will then take account of other AC loads and use whatever is extra for charging, thus preventing the generator or shore supply from being overloaded.

PowerAssist - Boosting the capacity of shore or generator power
Where peak power is so often required only for a limited period, the MultiPlus will make sure that insufficient shore or generator power is immediately compensated for by power from the battery. When the load reduces, the spare power is used to recharge the battery.

High start-up power
Needed to start high inrush loads such as power converters for LED lamps, halogen lamps or electric tools.

Search Mode
When Search Mode is 'on', the power consumption of the inverter in no-load operation is decreased by approx. 70%. In this mode the Multi, when operating in inverter mode, is switched off in case of no load or very low load, and switches on every two seconds for a short period. If the output current exceeds a set level, the inverter will continue to operate. If not, the inverter will shut down again.

Programmable relay
By default, the programmable relay is set as an alarm relay, i.e. the relay will de-energise in the event of an alarm or a pre-alarm (inverter almost too hot, ripple on the input almost too high, battery voltage almost too low).

12 Volt 24 Volt 48 Volt	12/500/20 24/500/10 48/500/6	12/800/35 24/800/16 48/800/9	12/1200/50 24/1200/25 48/1200/13	12/1600/70 24/1600/40 48/1600/20
PowerControl / PowerAssist	Yes / No	Yes / Yes		
Three Phase and parallel operation	Yes			
Transfer switch	16A			
INVERTER				
Input voltage range	9,5 – 17V	19 – 33V	38– 66V	
Output	Output voltage: 230VAC ± 2%	Frequency: 50Hz ± 0,1% (1)		
Cont. output power at 25°C (3)	500VA	800VA	1200VA	1600VA
Cont. output power at 25°C	430W	700W	1000W	1300W
Cont. output power at 40°C	400W	650W	900W	1100W
Cont. output power at 65°C	300W	400W	600W	800W
Peak power	900W	1600W	2400W	2800W
Maximum efficiency	90 / 91 / 92%	92 / 93 / 94%	93 / 94 / 95%	93 / 94 / 95%
Zero-load power	6 / 6 / 7W	7 / 7 / 8W	10 / 9 / 10W	10 / 9 / 10W
Zero-load power in search mode	2 / 2 / 3W	2 / 2 / 3W	3 / 3 /3W	3 / 3 /3W
CHARGER				
AC Input	Input voltage range: 187-265 VAC	Input frequency: 45 – 65 Hz		
Charge voltage 'absorption'	14,4 / 28,8 / 57,6V			
Charge voltage 'float'	13,8 / 27,6 / 55,2V			
Storage mode	13,2 / 26,4 /52,8V			
Charge current house battery (4)	20 / 10 / 6A	35 / 16 / 9A	50 / 25 / 13A	70 / 40 / 20A
Charge current starter battery	1A (12V and 24V models only)			
Battery temperature sensor	Yes			
GENERAL				
Programmable relay (5)	Yes			
Protection (2)	a – g			
VE.Bus communication port	For parallel and three phase operation, remote monitoring and system integration (RJ45-spliter ASS030065510 needed for 500/800/1200VA models)			
Remote on-off	On/off/charger only			On/off
DIP switches	Yes (6)			Yes (7)
Internal DC fuse	125/60/30A	150/80/40A	200/100/50A	200/125/60A
Common Characteristics	Operating temp. range: -40 to +65°C (fan assisted cooling) Humidity (non-condensing): max 95%			
ENCLOSURE				
Common Characteristics	Material & Colour: Steel/ABS (blue RAL 5012)	Protection category: IP 21		
Battery-connection	16 / 10 / 10 mm²	25 / 16 / 10 mm²	35 / 25 / 10 mm²	50 / 35 / 16 mm²
230V AC-connection	G-ST18i connector			
Weight	4,4 kg	6,4 kg	8,2 kg	10,2 kg
Dimensions (h x w x d)	311 x 182 x 100 mm	360 x 240 x 100 mm	406 x 250 x 100 mm	470 x 265 x 120 mm
STANDARDS				
Safety	EN-IEC 60335-1, EN-IEC 60335-2-29, EN 62109-1			
Emission / Immunity	EN 55014-1, EN 55014-2, EN-IEC 61000-3-2, EN-IEC 61000-3-3 IEC 61000-6-1, IEC 61000-6-2, IEC 61000-6-3			
Road vehicles	ECE R10-5			

1) Can be adjusted to 60Hz and to 240V
2) Protection
a. Output short circuit
b. Overload
c. Battery voltage too high
d. Battery voltage too low
e. Temperature too high
f. 230VAC on inverter output
g. Input voltage ripple too high

3) Non-linear load, crest factor 3:1
4) At 25°C ambient
5) Programmable relay which can be set for:
general alarm, DC under voltage or generator start/stop signal function
AC rating: 230V/4A
DC rating: 4A up to 35VDC, 1A up to 60VDC
6) Remote / Battery charge voltage / Inverter frequency / search mode
7) Battery charge voltage / search mode

MultiPlus
24/3000/70

MultiPlus Compact
12/2000/80

Two AC Outputs
The main output has no break functionality. The MultiPlus takes over the supply to the connected loads in the event of a grid failure or when shore/generator power is disconnected. This happens so fast (less than 20 milliseconds) that computers and other electronic equipment will continue to operate without disruption. The second output is live only when AC is available on the input of the MultiPlus. Loads that should not discharge the battery, like a water heater for example can be connected to this output (second output available on models rated at 3 kVA and more).

Virtually unlimited power thanks to parallel operation
Up to 6 Multis can operate in parallel to achieve higher power output. Six 24/5000/120 units, for example, will provide 25 kW / 30 kVA output power with 720 Amps charging capacity.

Three phase capability
In addition to parallel connection, three units of the same model can be configured for three phase output. But that's not all: up to 6 sets of three units can be parallel connected for a huge 75 kW / 90 kVA inverter and more than 2000 Amps charging capacity.

PowerControl - Dealing with limited generator, shore side or grid power
The MultiPlus is a very powerful battery charger. It will therefore draw a lot of current from the generator or shore side supply (nearly 10 A per 5 kVA Multi at 230 VAC). With the Multi Control Panel a maximum generator or shore current can be set. The MultiPlus will then take account of other AC loads and use whatever is extra for charging, thus preventing the generator or shore supply from being overloaded.

PowerAssist - Boosting the capacity of shore or generator power
This feature takes the principle of PowerControl to a further dimension. It allows the MultiPlus to supplement the capacity of the alternative source. Where peak power is so often required only for a limited period, the MultiPlus will make sure that insufficient shore or generator power is immediately compensated for by power from the battery. When the load reduces, the spare power is used to recharge the battery.

Solar energy: AC power available even during a grid failure
The MultiPlus can be used in off grid as well as grid connected PV and other alternative energy systems. Loss of mains detection software is available.

System configuring
- In case of a stand-alone application, if settings have to be changed, this can be done in a matter of minutes with a DIP switch setting procedure.
- Parallel and three phase applications can be configured with VE.Bus Quick Configure and VE.Bus System Configurator software.
- Off grid, grid interactive and self-consumption applications, involving grid-tie inverters and/or MPPT Solar Chargers can be configured with Assistants (dedicated software for specific applications).

On-site Monitoring and control
Several options are available: Battery Monitor, Multi Control Panel, Color Control GX or other GX devices, smartphone or tablet (Bluetooth Smart), laptop or computer (USB or RS232).

Remote Monitoring and control
Color Control GX or other GX devices.
Data can be stored and displayed on our VRM (Victron Remote Management) website, free of charge.

Remote configuring
When connected to the Ethernet, systems with a Color Control GX or other GX device can be accessed and settings can be changed remotely.

Color Control GX, showing a PV application

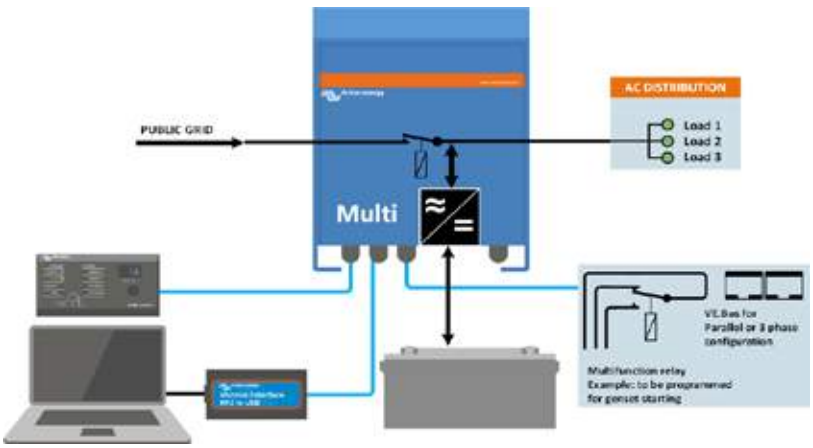

MultiPlus 12 Volt 24 Volt 48 Volt	C 12/800/35 C 24/ 800/16	C 12/1200/50 C 24/1200/25	C 12/1600/70 C 24/1600/40	C 12/2000/80 C 24/2000/50	12/3000/120 24/3000/70 48/3000/35	24/5000/120 48/5000/70
PowerControl	Yes	Yes	Yes	Yes	Yes	Yes
PowerAssist	Yes	Yes	Yes	Yes	Yes	Yes
Transfer switch (A)	16	16	16	30	16 or 50	100
INVERTER						
Input voltage range (V DC)	9,5 – 17 V 19 – 33 V 38 – 66 V					
Output	Output voltage: 230 VAC ± 2% Frequency: 50 Hz ± 0,1% (1)					
Cont. output power at 25°C (VA) (3)	800	1200	1600	2000	3000	5000
Cont. output power at 25°C (W)	700	1000	1300	1600	2400	4000
Cont. output power at 40°C (W)	650	900	1200	1400	2200	3700
Cont. output power at 65°C (W)	400	600	800	1000	1700	3000
Peak power (W)	1600	2400	3000	4000	6000	10.000
Maximum efficiency (%)	92 / 94	93 / 94	93 / 94	93 / 94	93 / 94 / 95	94 / 95
Zero load power (W)	8 / 10	8 / 10	8 / 10	9 / 11	20 / 20 / 25	30 / 35
Zero load power in AES mode (W)	5 / 8	5 / 8	5 / 8	7 / 9	15 / 15 / 20	25 / 30
Zero load power in Search mode (W)	2 / 3	2 / 3	2 / 3	3 / 4	8 / 10 / 12	10 / 15
CHARGER						
AC Input	Input voltage range: 187-265 VAC Input frequency: 45 – 65 Hz Power factor: 1					
Charge voltage 'absorption' (V DC)	14,4 / 28,8 / 57,6					
Charge voltage 'float' (V DC)	13,8 / 27,6 / 55,2					
Storage mode (V DC)	13,2 / 26,4 / 52,8					
Charge current house battery (A) (4)	35 / 16	50 / 25	70 / 40	80 / 50	120 / 70 / 35	120 / 70
Charge current starter battery (A)	4 (12 V and 24 V models only)					
Battery temperature sensor	yes					
GENERAL						
Auxiliary output (5)	n. a.	n. a.	n. a.	n. a.	Yes (16A)	Yes (50A)
Programmable relay (6)	Yes					
Protection (2)	a - g					
VE.Bus communication port	For parallel and three phase operation, remote monitoring and system integration					
General purpose com. port	n. a.	n. a.	n. a.	n. a.	Yes	Yes
Remote on-off	Yes					
Common Characteristics	Operating temp. range: -40 to +65°C (fan assisted cooling) Humidity (non-condensing): max 95%					
ENCLOSURE						
Common Characteristics	Material & Colour: aluminium (blue RAL 5012) Protection category: IP 21					
Battery-connection	battery cables of 1.5 meter			M8 bolts	Four M8 bolts (2 plus and 2 minus connections)	
230 V AC-connection	G-ST18i connector			Spring-clamp	Screw terminals 13 mm² (6 AWG)	M6 bolts
Weight (kg)	10	10	10	12	18	30
Dimensions (hxwxd in mm)	375x214x110			520x255x125	362x258x218	444x328x240
STANDARDS						
Safety	EN-IEC 60335-1, EN-IEC 60335-2-29, IEC 62109-1					
Emission, Immunity	EN 55014-1, EN 55014-2, EN-IEC 61000-3-2, EN-IEC 61000-3-3, IEC 61000-6-1, IEC 61000-6-2, IEC 61000-6-3					
Road vehicles	12V and 24V models: ECE R10-4					
Anti-islanding	See our website					

1) Can be adjusted to 60 HZ; 120 V 60 Hz on request
2) Protection key:
a) output short circuit
b) overload
c) battery voltage too high
d) battery voltage too low
e) temperature too high
f) 230 VAC on inverter output
g) input voltage ripple too high

3) Non-linear load, crest factor 3:1
4) At 25°C ambient
5) Switches off when no external AC source available
6) Programmable relay that can a.o. be set for general alarm,
DC under voltage or genset start/stop function
AC rating: 230 V/4A
DC rating: 4 A up to 35 VDC, 1 A up to 60 VDC

Digital Multi Control Panel
A convenient and low cost solution for remote monitoring, with a rotary knob to set PowerControl and PowerAssist levels.

VE.Bus Smart Dongle
Measures battery voltage and temperature and allows monitoring and control of Multis and Quattros with a smartphone or other

Bluetooth enabled device.

Computer controlled operation and monitoring
Several interfaces are available:

Color Control GX or other GX device
Provides monitor and control. Locally, and also remotely on the VRM Portal.

MK3-USB VE.Bus to USB interface
Connects to a USB port (see 'A guide to VEConfigure')

VE.Bus to NMEA 2000 interface
Connects the device to a NMEA2000 marine electronics network. See the NMEA2000 & MFD integration guide

BMV-712 Smart Battery Monitor
Use a smartphone or other Bluetooth enabled device to:
- customize settings,
- monitor all important data on single screen,
- view historical data, and to
- update the software when new features become available.

Quattro
48/5000/70-100/100

Quattro
48/15000/200-100/100

Two AC inputs with integrated transfer switch
The Quattro can be connected to two independent AC sources, for example the public grid and a generator, or two generators. The Quattro will automatically connect to the active source.

Two AC Outputs
The main output has no-break functionality. The Quattro takes over the supply to the connected loads in the event of a grid failure or when shore/generator power is disconnected. This happens so fast (less than 20 milliseconds) that computers and other electronic equipment will continue to operate without disruption.
The second output is live only when AC is available on one of the inputs of the Quattro. Loads that should not discharge the battery, like a water heater for example, can be connected to this output.

Virtually unlimited power thanks to parallel operation
Up to 6 Quattro units can operate in parallel. Six units 48/10000/140, for example, will provide 48kW / 60kVA output power and 840 Amps charging capacity.

Split phase options
Two units can be stacked to provide 120-0-120V, and additional units can be paralleled up to a total of 6 units per phase, to supply up to 30kW / 36kVA of split phase power.
Alternatively, a split phase AC source can be obtained by connecting our autotransformer (see data sheet on www.victronenergy.com) to a 'European' inverter programmed to supply 240V / 60Hz.

Three phase capability
Three units can be configured for three phase output. But that's not all: up to 6 sets of three units can be parallel connected to provide 144kW / 180kVA inverter power and more than 2500A charging capacity.

PowerControl – Dealing with limited generator, shore side or grid power
The Quattro is a very powerful battery charger. It will therefore draw a lot of current from the generator or shore side supply (16A per 5kVA Quattro at 230VAC). A current limit can be set on each AC input. The Quattro will then take account of other AC loads and use whatever is spare for charging, thus preventing the generator or mains supply from being overloaded.

PowerAssist – Boosting shore or generator power
This feature takes the principle of PowerControl to a further dimension allowing the Quattro to supplement the capacity of the alternative source. Where peak power is so often required only for a limited period, the Quattro will make sure that insufficient mains or generator power is immediately compensated for by power from the battery. When the load reduces, the spare power is used to recharge the battery.

Solar energy: AC power available even during a grid failure
The Quattro can be used in off grid as well as grid connected PV and other alternative energy systems.
Loss of mains detection software is available.

System configuring
- In case of a stand-alone application, if settings have to be changed, this can be done in a matter of minutes with a DIP switch setting procedure.
- Parallel and three phase applications can be configured with VE.Bus Quick Configure and VE.Bus System Configurator software.
- Off grid, grid interactive and self-consumption applications, involving grid-tie inverters and/or MPPT Solar Chargers can be configured with Assistants (dedicated software for specific applications).

On-site Monitoring and control
Several options are available: Battery Monitor, Multi Control Panel, Color Control GX or other GX devices, smartphone or tablet (Bluetooth Smart), laptop or computer (USB or RS232).

Remote Monitoring and control
Color Control GX or other GX devices.
Data can be stored and displayed on our VRM (Victron Remote Management) website, free of charge.

Remote configuring
When connected to the Ethernet, systems with a Color Control GX or other GX device can be accessed and settings can be changed remotely.

Color Control GX, showing a PV application

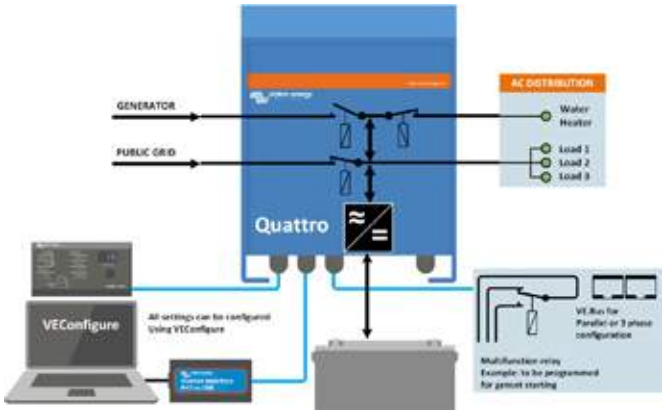

Quattro	12/3000/120-50/50 24/3000/70-50/50	12/5000/220-100/100 24/5000/120-100/100 48/5000/70-100/100	24/8000/200-100/100 48/8000/110-100/100	48/10000/140-100/100	48/15000/200-100/100
PowerControl / PowerAssist	Yes				
Integrated Transfer switch	Yes				
AC inputs (2x)	Input voltage range: 187-265 VAC Input frequency: 45 – 65 Hz Power factor: 1				
Maximum feed through current (A)	2x 50	2x100	2x100	2x100	2x100
INVERTER					
Input voltage range (V DC)	9,5 – 17V 19 – 33V 38 – 66V				
Output (1)	Output voltage: 230 VAC ± 2% Frequency: 50 Hz ± 0,1%				
Cont. output power at 25°C (VA) (3)	3000	5000	8000	10000	15000
Cont. output power at 25°C (W)	2400	4000	6500	8000	12000
Cont. output power at 40°C (W)	2200	3700	5500	6500	10000
Cont. output power at 65°C (W)	1700	3000	3600	4500	7000
Peak power (W)	6000	10000	16000	20000	25000
Maximum efficiency (%)	93 / 94	94 / 94 / 95	94 / 96	96	96
Zero load power (W)	20 / 20	30 / 30 / 35	60 / 60	60	110
Zero load power in AES mode (W)	15 / 15	20 / 25 / 30	40 / 40	40	75
Zero load power in Search mode (W)	8 / 10	10 / 10 / 15	15 / 15	15	20
CHARGER					
Charge voltage 'absorption' (V DC)	14,4 / 28,8	14,4 / 28,8 / 57,6	28,8 / 57,6	57,6	57,6
Charge voltage 'float' (V DC)	13,8 / 27,6	13,8 / 27,6 / 55,2	27,6 / 55,2	55,2	55,2
Storage mode (V DC)	13,2 / 26,4	13,2 / 26,4 / 52,8	26,4 / 52,8	52,8	52,8
Charge current house battery (A) (4)	120 / 70	220 / 120 / 70	200 / 110	140	200
Charge current starter battery (A)	4 (12V and 24V models only)				
Battery temperature sensor	Yes				
GENERAL					
Auxiliary output (A) (5)	25	50	50	50	50
Programmable relay (6)	3x	3x	3x	3x	3x
Protection (2)	a-g				
VE.Bus communication port	For parallel and three phase operation, remote monitoring and system integration				
General purpose com. port	2x	2x	2x	2x	2x
Remote on-off	Yes				
Common Characteristics	Operating temp.: -40 to +65˚C Humidity (non-condensing): max. 95%				
ENCLOSURE					
Common Characteristics	Material & Colour: aluminium (blue RAL 5012) Protection category: IP 21				
Battery-connection	Four M8 bolts (2 plus and 2 minus connections)				
230 V AC-connection	Screw terminals 13 mm² (6 AWG)	Bolts M6	Bolts M6	Bolts M6	Bolts M6
Weight (kg)	19	34 / 30 / 30	45 / 41	51	72
Dimensions (hxwxd in mm)	362 x 258 x 218	470 x 350 x 280 444 x 328 x 240 444 x 328 x 240	470 x 350 x 280	470 x 350 x 280	572 x 488 x 344
STANDARDS					
Safety	EN-IEC 60335-1, EN-IEC 60335-2-29, EN-IEC 62109-1				
Emission, Immunity	EN 55014-1, EN 55014-2, EN-IEC 61000-3-2, EN-IEC 61000-3-3, IEC 61000-6-1, IEC 61000-6-2, IEC 61000-6-3				
Road vehicles	12V and 24V models: ECE R10-4				
Anti-islanding	See our website				

1) Can be adjusted to 60 HZ; 120 V 60 Hz on request
2) Protection key:
   a) output short circuit
   b) overload
   c) battery voltage too high
   d) battery voltage too low
   e) temperature too high
   f) 230 VAC on inverter output
   g) input voltage ripple too high
3) Non-linear load, crest factor 3:1
4) At 25˚C ambient
5) Switches off when no external AC source available
6) Programmable relay that can a.o. be set for general alarm,
   DC under voltage or genset start/stop function
   AC rating: 230 V / 4 A
   DC rating: 4 A up to 35 VDC, 1 A up to 60 VDC

Digital Multi Control Panel

A convenient and low cost solution for remote monitoring, with a rotary knob to set PowerControl and PowerAssist levels.

VE.Bus Smart Dongle

Measures battery voltage and temperature and allows monitoring and control of Multis and Quattros with a smartphone or other

Bluetooth enabled device.

Computer controlled operation and monitoring

Several interfaces are available:

Color Control GX and other GX devices

Monitoring and control. Locally, and also remotely on the VRM Portal.

MK3-USB (VE.Bus to USB interface)

Connects to a USB port (see 'A guide to VEConfigure')

VE.Bus to NMEA 2000 interface

Connects the device to a NMEA2000 marine electronics network. See the NMEA2000 & MFD integration guide

BMV-712 Smart Battery Monitor

Use a smartphone or other Bluetooth enabled device to:

- customize settings,
- monitor all important data on single screen,
- view historical data, and to
- update the software when new features become available.

A MultiPlus, plus ESS (Energy Storage System) functionality

The MultiPlus-II is a multifunctional inverter/charger with all the features of the MultiPlus, plus an external current sensor option which extends the PowerControl and PowerAssist function to 50A resp. 100A.
The MultiPlus-II is ideally suited for professional marine, yachting, vehicle and land based off-grid applications.
It also has built-in anti-islanding functionality, and an increasingly long list of country approvals for ESS application.
Several system configurations are possible. For more detailed information see the ESS Design and configuration manual.

PowerControl and PowerAssist - Boosting the capacity of the grid or a generator

A maximum grid or generator current can be set. The MultiPlus-II will then take account of other AC loads and use whatever is extra for battery charging, thus preventing the generator or grid from being overloaded (PowerControl function).
PowerAssist takes the principle of PowerControl to a further dimension. Where peak power is so often required only for a limited period, the MultiPlus-II will compensate insufficient generator, shore or grid power with power from the battery. When the load reduces, the spare power is used to recharge the battery.

Solar energy: AC power available even during a grid failure

The MultiPlus-II can be used in off grid as well as grid connected PV and other alternative energy systems. It is compatible with both solar charger controllers and grid-tie inverters.

Two AC Outputs

The main output has no break functionality. The MultiPlus-II takes over the supply to the connected loads in the event of a grid failure or when shore/generator power is disconnected. This happens so fast (less than 20 milliseconds) that computers and other electronic equipment will continue to operate without disruption.
The second output is live only when AC is available on the input of the MultiPlus-II. Loads that should not discharge the battery, like a water heater for example, can be connected to this output.

Virtually unlimited power thanks to parallel and three phase operation

Up to 6 Multis can operate in parallel to achieve higher power output. Six 48/5000/70 units, for example, will provide 25 kW / 30 kVA output power with 420 Amps charging capacity.
In addition to parallel connection, three units of the same model can be configured for three phase output. But that's not all: up to 6 sets of three units can be parallel connected for a 75 kW / 90 kVA inverter and more than 1200 Amps charging capacity.

On-site system configuring, monitoring and control

Settings can be changed in a matter of minutes with VEConfigure software (computer or laptop and MK3-USB interface needed).
Several monitoring and control options are available: Color Control GX, Venus GX, Octo GX, CANvu GX, laptop, computer, Bluetooth (with the optional VE.Bus Smart dongle), Battery Monitor, Digital Multi Control Panel.

Remote configuring and monitoring

Install a Color Control GX or other GX product to connect to the internet.
Operational data can be stored and displayed on our VRM (Victron Remote Management) website, free of charge.
When connected to the internet, systems can be accessed remotely, and settings can be changed.

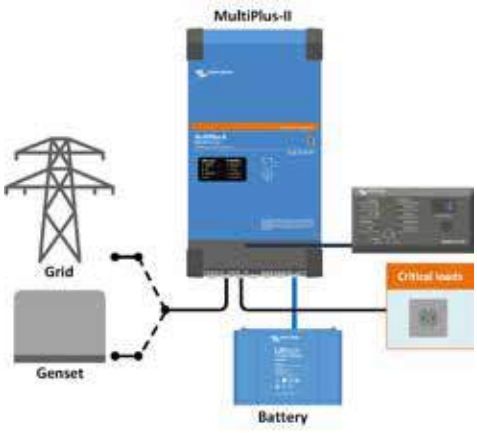

Standard marine, mobile or off-grid application
Loads that should shut down when AC input power is not available can be connected to a second output (not shown). These loads will be taken into account by the PowerControl and PowerAssist function in order to limit AC input current to a safe value when AC power is available.

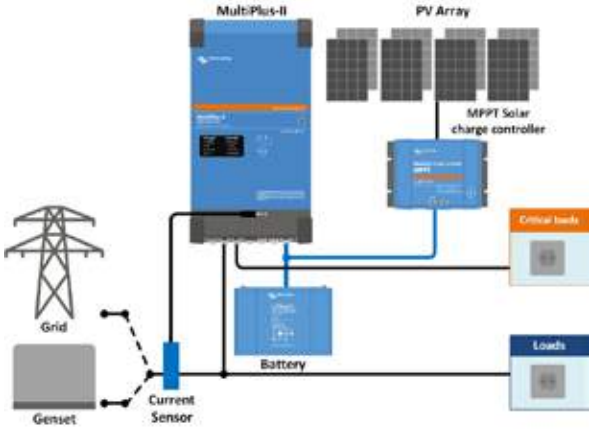

Grid parallel topology with MPPT solar charge controller
The MultiPlus-II will use data from the external AC current sensor (must be ordered separately) or power meter to optimise self-consumption and, if required, to prevent grid feed. In case of a power outage, the MultiPlus-II will continue to supply the critical loads

Color Control Panel (CCGX)
Provides intuitive system control and monitoring
Besides system monitoring and control the CCGX enables access to our free remote monitoring website: the VRM Online Portal

VRM Portal
Our free remote monitoring website (VRM) will display all your system data in a comprehensive graphical format. System settings can be changed remotely via the portal. Alarms can be received by e-mail.

VRM app
Monitor and manage your Victron Energy system from your smart phone and tablet. Available for both iOS and Android.

VE.Bus Smart Dongle
Measures battery voltage and temperature and allows monitoring and control with a smart phone or other Bluetooth enabled device.

MultiPlus-II	24/3000/70-32	48/3000/35-32	48/5000/70-50
PowerControl & PowerAssist	Yes		
Transfer switch	32 A		50 A
Maximum AC input current	32 A		50 A
INVERTER			
DC Input voltage range	19 – 33 V	38 – 66 V	
Output	Output voltage: 230 VAC ± 2% Frequency: 50 Hz ± 0,1% (1)		
Cont. output power at 25°C (3)	3000 VA		5000VA
Cont. output power at 25°C	2400 W		4000W
Cont. output power at 40°C	2200 W		3700W
Cont. output power at 65°C	1700 W		3000W
Maximum apparent feed-in power	2500VA		4000VA
Peak power	5500 W		9000W
Maximum efficiency	94 %	95 %	96%
Zero load power	13 W	11 W	18W
Zero load power in AES mode	9 W	7 W	12W
Zero load power in Search mode	3 W	2 W	2W
CHARGER			
AC Input	Input voltage range: 187-265 VAC Input frequency: 45 – 65 Hz		
Charge voltage 'absorption'	28,8 V	57,6 V	
Charge voltage 'float'	27,6 V	55,2 V	
Storage mode	26,4 V	52,8 V	
Maximum battery charge current (4)	70 A	35 A	70A
Battery temperature sensor	Yes		
GENERAL			
Auxiliary output	Yes (32 A)		
External AC current sensor (optional)	50 A		100 A
Programmable relay (5)	Yes		
Protection (2)	a - g		
VE.Bus communication port	For parallel and three phase operation, remote monitoring and system integration		
General purpose com. port	Yes, 2x		
Remote on-off	Yes		
Operating temperature range	-40 to +65°C (fan assisted cooling)		
Humidity (non-condensing)	max 95%		
ENCLOSURE			
Material & Colour	Steel, blue RAL 5012		
Protection category	IP22		
Battery-connection	M8 bolts		
230 V AC-connection	Screw terminals 13 mm² (6 AWG)		
Weight	18 kg		29 kg
Dimensions (hxwxd)	506 x 275 x 147 mm		565 x 323 x 148 mm
STANDARDS			
Safety	EN-IEC 60335-1, EN-IEC 60335-2-29, EN-IEC 62109-1, EN-IEC 62109-2		
Emission, Immunity	EN 55014-1, EN 55014-2 EN-IEC 61000-3-2, EN-IEC 61000-3-3 IEC 61000-6-1, IEC 61000-6-2, IEC 61000-6-3		
Uninterruptible power supply	IEC 62040-1, AS 620401.1		
Anti-islanding	VDE-AR-N 4105, TOR-D4, AS/NZS 4777.2, NRS 097-2-1, UTE C15-712-1, C10/11, RD 1699-RD 413, G59/3-2, G83/2, EN 50549		

1) Can be adjusted to 60 Hz
2) Protection key:
a) output short circuit
b) overload
c) battery voltage too high
d) battery voltage too low
e) temperature too high
f) 230 VAC on inverter output
g) input voltage ripple too high

3) Non-linear load, crest factor 3:1
4) At 25°C ambient
5) Programmable relay which can be set for general alarm, DC under voltage or genset start/stop function. AC rating: 230V / 4A, DC rating: 4A up to 35VDC and 1A up to 60VDC

Connection Area

Current sensor 100A:50mA
To implement PowerControl and PowerAssist and to optimize self-consumption with external current sensing.
Maximum current: 50A resp. 100A.
Length of connection cable: 1 m.

Digital Multi Control Panel
A convenient and low-cost solution for remote monitoring, with a rotary knob to set PowerControl and PowerAssist levels.

MultiPlus
24/3000/70

MultiPlus Compact
12/2000/80

Multifunctional, with intelligent power management
The MultiPlus is a powerful true sine wave inverter, a sophisticated battery charger that features adaptive charge technology, and a high-speed AC transfer switch in a single compact enclosure. Next to these primary functions, the MultiPlus has several advanced features, as outlined below.

Two AC Outputs
The main output has no-break functionality. The MultiPlus takes over the supply to the connected loads in the event of a grid failure or when shore-/generator power is disconnected. This happens so fast (less than 20 milliseconds) that computers and other electronic equipment will continue to operate without disruption.
The second output is live only when AC is available on the input of the MultiPlus. Loads that should not discharge the battery, like a water heater for example, can be connected to this output (second output available on models rated at 3kVA and more).

Virtually unlimited power thanks to parallel operation
Up to six Multis can operate in parallel to achieve higher power output. Six 24/3000/70 units, for example, provide 15kW / 18kVA output power with 420 Amps of charging capacity.

Three phase capability
In addition to parallel connection, three units can be configured for three-phase output. But that's not all: with three strings of six parallel units a 45 kW / 54 kVA three phase inverter and 1260 A charger can be built.

Split phase options
Two units can be stacked to provide 120-0-120 V, and additional units can be paralleled up to a total of 6 units per phase, to supply up to 30 kW / 36 kVA of split phase power.
Alternatively, a split phase AC source can be obtained by connecting our autotransformer (see data sheet on www.victronenergy.com) to a 'European' inverter programmed to supply 240 V / 60 Hz.

PowerControl - Dealing with limited generator, shore side or grid power
The MultiPlus is a very powerful battery charger. It will therefore draw a lot of current from the generator or shore side supply (nearly 20 A per 3 kVA MultiPlus at 120 VAC). With the Multi Control Panel a maximum generator or shore current can be set. The MultiPlus will then take account of other AC loads and use whatever is extra for charging, thus preventing the generator or shore supply from being overloaded.

PowerAssist - Boosting the capacity of shore or generator power
This feature takes the principle of PowerControl to a further dimension. It allows the MultiPlus to supplement the capacity of the alternative source. Where peak power is so often required only for a limited period, the MultiPlus will make sure that insufficient shore or generator power is immediately compensated for by power from the battery. When the load reduces, the spare power is used to recharge the battery.

Four stage adaptive charger and dual bank battery charging
The main output provides a powerful charge to the battery system by means of advanced 'adaptive charge' software. The software fine-tunes the three stage automatic process to suit the condition of the battery, and adds a fourth stage for long periods of float charging. The adaptive charge process is described in more detail on the Phoenix Charger datasheet and on our website, under Technical Information. In addition to this, the MultiPlus will charge a second battery using an independent trickle charge output intended for a main engine or generator starter battery.

System configuring has never been easier
After installation, the MultiPlus is ready to go.
If settings have to be changed, this can be done in a matter of minutes with a DIP switch setting procedure. Even parallel and 3-phase operation can be programmed with DIP switches: no computer needed!
Alternatively, VI .Net can be used instead of the DIP switches.
And sophisticated software (VI .Bus Quick Configure and VI .Bus System Configurator) is available to configure several new, advanced, features.

PowerAssist with 2x MultiPlus in parallel

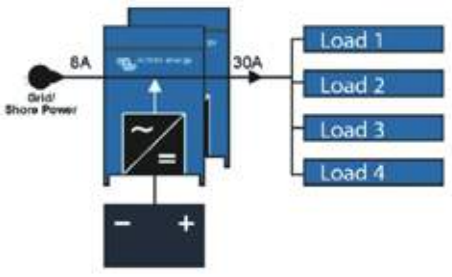

Five parallel units: output power 12,5 kW

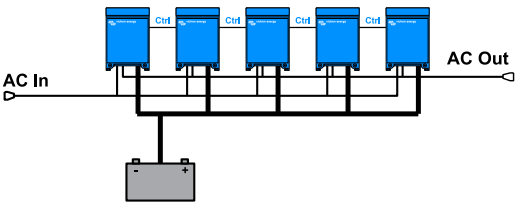

MultiPlus	12 Volt 24 Volt	12/2000/80 24/2000/50	12/3000/120 24/3000/70
PowerControl		Yes	
PowerAssist		Yes	
Transfer switch (A)		50	
Parallel and 3-phase operation		Yes	
INVERTER			
Input voltage range (VDC)		9,5 – 17 V 19 – 33 V	
Output		Output voltage: 120 VAC ± 2% Frequency: 60 Hz ± 0,1% (1)	
Continuous power at 25°C / 77°F (VA) (3)		2000	3000
Continuous power at 25°C / 77°F (W)		1600	2400
Continuous power at 40°C / 104°F (W)		1450	2200
Continuous power at 65°C / 150°F (W)		1100	1700
Peak power (W)		4000	6000
Maximum efficiency (%)		92 / 94	93 / 94
Zero load power (W)		9 / 11	20 / 20
Zero load power in AES mode (W)		7 / 8	15 / 15
Zero load power in Search mode (W)		3 / 4	8 / 10
CHARGER			
AC Input		Input voltage range: 95-140 VAC Input frequency: 45 – 65 Hz Power factor: 1	
Charge voltage absorption (VDC)		14,4 / 28,8	
Charge voltage float (VDC)		13,8 / 27,6	
Storage mode (VDC)		13,2 / 26,4	
Charge current house battery (A) (4)		80 / 50	120 / 70
Charge current starter battery (A)		4	
Battery temperature sensor		yes	
GENERAL			
Auxiliary output (5)		n. a.	Yes (32A)
Programmable relay (6)		Yes (1x)	Yes (3x)
Protection (2)		a - g	
VE.Bus communication port		for parallel and three phase operation, remote monitoring and system integration	
General purpose com. port (7)		n. a.	Yes (2x)
Remote on-off		Yes	
Common Characteristics		Operating temp. range: -40 - +65°C / -40 to 150°F (fan assisted cooling) Humidity (non-condensing): max 95%	
ENCLOSURE			
Common Characteristics		Material & Colour: aluminium (blue RAL 5012) Protection category: IP 21	
Battery-connection		M8 bolts	M8 bolts (2 plus and 2 minus connections)
120 V AC-connection		Screw-terminal 6 AWG (13 mm²)	Screw-terminal 6 AWG (13mm²)
Weight		13 kg 25 lbs.	19kg 40 lbs.
Dimensions (hxwxd in mm and inches)		520x255x125 mm 20.5x10.0x5.0 inch	362x258x218 mm 14.3x10.2x8.6 inch
STANDARDS			
Safety		EN-IEC 60335-1, EN-IEC 60335-2-29	UL 1741, UL 458, EN-IEC 60335-1, EN-IEC 60335-2-29
Emission and Immunity		EN-IEC 61000-3-2/3-3/, EN-IEC 61000-6-1/6-2/6-3	EN-IEC 61000-3-2/3-3/, EN-IEC 61000-6-1/6-2/6-3

1) Can be adjusted to 60 Hz / 120 V 60 Hz on request
2) Protection key:
a) output short circuit
b) overload
c) battery voltage too high
d) battery voltage too low
e) temperature too high
f) 230 VAC on inverter output
g) input voltage ripple too high
3) Non-linear load, crest factor 3:1
4) At 75°F ambient
5) Switches off when no external AC source available
6) Programmable relay that can also be set for general alarm,
DC under voltage or gen. start/stop function
AC rating: 230 V/4 A
DC rating: 4 A up to 35 VDC, 1 A up to 60 VDC
7) A.o. to communicate with a lithium-ion battery BMS

Digital Multi Control
A convenient and low cost solution for remote monitoring, with a rotary knob to set PowerControl and PowerAssist levels.

VE.Bus Smart Dongle
Measures battery voltage and temperature and allows monitoring and control of Multi's and Quattros with a smartphone or other Bluetooth enabled device.

Computer controlled operation and monitoring
Several interfaces are available:

Color Control GX and other GX devices
Provides monitor and control. Locally, and also remotely on the VRM Portal.

MK3-USB VE.Bus to USB interface
Connects to a USB port (see 'A guide to VEConfigure')

VE.Bus to NMEA 2000 interface
Connects the device to a NMEA2000 marine electronics network. See the NMEA2000 & MFD integration guide

BMV-712 Smart Battery Monitor
Use a smartphone or other Bluetooth enabled device to:
- customize settings,
- monitor all important data on single screen,
- view historical data, and to
- update the software when new features become available.

Quattro
48/5000/70-100/100

Two AC inputs with integrated transfer switch
The Quattro can be connected to two independent AC sources, for example the public grid and a generator, or two generators. The Quattro will automatically connect to the active source.

Two AC Outputs
The main output has no-break functionality. The Quattro takes over the supply to the connected loads in the event of a grid failure or when shore/generator power is disconnected. This happens so fast (less than 20 milliseconds) that computers and other electronic equipment will continue to operate without disruption.
The second output is live only when AC is available on one of the inputs of the Quattro. Loads that should not discharge the battery, like a water heater for example, can be connected to this output.

Virtually unlimited power thanks to parallel operation
Up to 6 Quattro units can operate in parallel. Six units 48/10000/140, for example, will provide 48kW / 60kVA output power and 840 Amps charging capacity.

Split phase and three phase capability
Two units can be configured for split phase, and three units can be configured for three phase output. But that's not all: up to 6 sets of three units can be parallel connected to provide 144kW / 180kVA inverter power and more than 2500A charging capacity. For more detail please enter *parallel* in the search box on our website.

PowerControl – Dealing with limited generator, shore side or grid power
The Quattro is a very powerful battery charger. It will therefore draw a lot of current from the generator or shore side supply (16A per 5kVA Quattro at 230VAC). A current limit can be set on each AC input. The Quattro will then take account of other AC loads and use whatever is spare for charging, thus preventing the generator or mains supply from being overloaded.

PowerAssist – Boosting shore or generator power
This feature takes the principle of PowerControl to a further dimension allowing the Quattro to supplement the capacity of the alternative source. Where peak power is so often required only for a limited period, the Quattro will make sure that insufficient mains or generator power is immediately compensated for by power from the battery. When the load reduces, the spare power is used to recharge the battery.

Solar energy: AC power available even during a grid failure
The Quattro can be used in off grid as well as grid connected PV and other alternative energy systems.
Loss of mains detection software is available.

System configuring
- In case of a stand-alone application, if settings have to be changed, this can be done in a matter of minutes with a DIP switch setting procedure.
- Parallel and three phase applications can be configured with VE.Bus Quick Configure and VE.Bus System Configurator software.
- Off grid, grid interactive and self-consumption applications, involving grid-tie inverters and/or MPPT Solar Chargers can be configured with Assistants (dedicated software for specific applications).

On-site Monitoring and control
Several options are available: Battery Monitor, Multi Control Panel, Color Control GX or other GX devices, smartphone or tablet (Bluetooth Smart), laptop or computer (USB or RS232).

Remote Monitoring and control
Color Control GX or other GX devices.
Data can be stored and displayed on our VRM (Victron Remote Management) website, free of charge.

Remote configuring
When connected to the Ethernet, systems with a Color Control GX or other GX device can be accessed and settings can be changed remotely.

Color Control GX, showing a PV application

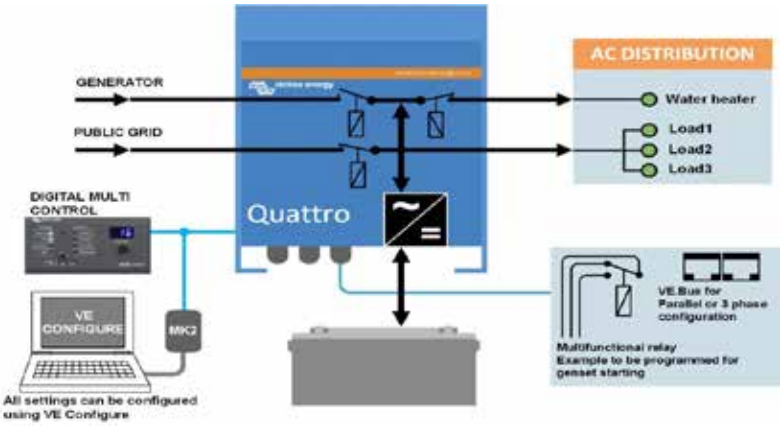

Quattro	48/3000/35-50/50 120V	24/5000/120-100/100 120V 48/5000/70-100/100 120V	48/10000/140-100/100 120V
PowerControl / PowerAssist	Yes		
Integrated Transfer switch	Yes		
AC inputs (2x)	Input voltage range: 90-140 VAC Input frequency: 45 – 65 Hz Power factor: 1		
Maximum feed through current	2x 50 A	2x 100 A	2x 100 A
INVERTER			
Input voltage range	9,5 – 17 V 19 – 33V 38 – 66 V		
Output (1)	Output voltage: 120 VAC ± 2% Frequency: 60 Hz ± 0,1%		
Cont. output power at 25°C (3)	3000 VA	5000 VA	10000 VA
Cont. output power at 25°C	2400 W	4000 W	8000 W
Cont. output power at 40°C	2200 W	3700 W	6500 W
Cont. output power at 65°C	1700 W	3000 W	4500 W
Peak power	6000 W	10000 W	20000 W
Maximum efficiency	94 %	94 / 94 / 95 %	96 %
Zero load power	25 W	30 / 30 / 35 W	60 W
Zero load power in AES mode	20 W	20 / 25 / 30 W	40 W
Zero load power in Search mode	12 W	10 / 10 / 15 W	15 W
CHARGER			
Charge voltage 'absorption' (V DC)	57,6 V	14,4 / 28,8 / 57,6 V	57,6 V
Charge voltage 'float' (V DC)	55,2 V	13,8 / 27,6 / 55,2 V	55,2 V
Storage mode (V DC)	52,8 V	13,2 / 26,4 / 52,8 V	52,8 V
Charge current house battery (A) (4)	35 A	200 / 120 / 70 A	140 A
Charge current starter battery (A)	4 A (12V and 24V models only)		
Battery temperature sensor	Yes		
GENERAL			
Auxiliary output (5)	32 A	50 A	50 A
Programmable relay (6)	3x		
Protection (2)	a-g		
VE.Bus communication port	For parallel, split phase and three phase operation, remote monitoring and system integration		
General purpose com. port	2x		
Remote on-off	Yes		
Common Characteristics	Operating temp.: -40 to +65°C Humidity (non-condensing): max. 95%		
ENCLOSURE			
Common Characteristics	Material & Colour: aluminium (blue RAL 5012) Protection category: IP 21		
Battery-connection	Four M8 bolts (2 plus and 2 minus connections)		
230 V AC-connection	Screw terminals 13 mm² (6 AWG)	Bolts M6	Bolts M6
Weight (kg)	42 lb 19 kg	75 / 66 / 66 lb 34 / 30 / 30 kg	128 lb 58 kg
Dimensions (hxwxd)	14.3 x 10.2 x 8.6 inch 362 x 258 x 218 mm	18,5 x 14,0 x 11,2 inch 470 x 350 x 280 mm 17,5 x 13,0 x 9,6 inch 444 x 328 x 240 mm 17,5 x 13,0 x 9,6 inch 444 x 328 x 240 mm	22.6 x 19,2 x 13,6 inch 572 x 488 x 344 mm
STANDARDS			
Safety	EN-IEC 60335-1, EN-IEC 60335-2-29, EN-IEC 62109-1		
Emission, Immunity	EN 55014-1, EN 55014-2, EN-IEC 61000-3-2, EN-IEC 61000-3-3, IEC 61000-6-1, IEC 61000-6-2, IEC 61000-6-3		
Road vehicles	12V and 24V models: ECE R10-5		
Anti-islanding	See our website		

1) Can be adjusted to 60 HZ; 120 V 60 Hz on request
2) Protection key:
   a) output short circuit
   b) overload
   c) battery voltage too high
   d) battery voltage too low
   e) temperature too high
   f) 230 VAC on inverter output
   g) input voltage ripple too high
3) Non-linear load, crest factor 3:1
4) At 25°C ambient
5) Switches off when no external AC source available
6) Programmable relay that can a.o. be set for general alarm,
   DC under voltage or genset start/stop function
   AC rating: 230 V / 4 A
   DC rating: 4 A up to 35 VDC, 1 A up to 60 VDC

Digital Multi Control Panel

A convenient and low cost solution for remote monitoring, with a rotary knob to set PowerControl and PowerAssist levels.

VE.Bus Smart Dongle

Measures battery voltage and temperature and allows monitoring and control of Multis and Quattros with a smartphone or other

Bluetooth enabled device.

Computer controlled operation and monitoring

Several interfaces are available:

Color Control GX and other GX devices

Monitoring and control. Locally, and also remotely on the VRM Portal.

MK3-USB VE.Bus to USB interface

Connects to a USB port (see 'A guide to VEConfigure')

VE.Bus to NMEA 2000 interface

Connects the device to a NMEA2000 marine electronics network. See the NMEA2000 & MFD integration guide

BMV-712 Smart Battery Monitor

Use a smartphone or other Bluetooth enabled device to:

- customize settings,
- monitor all important data on single screen,
- view historical data, and to
- update the software when new features become available.

DURA VERMEER
SW42

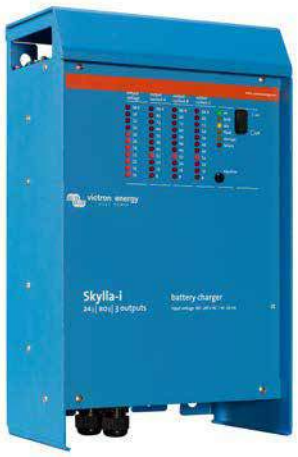

Skylla-i 24/100 (3)

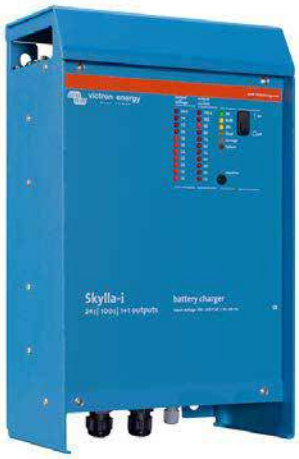

Skylla-i 24/100 (1+1)

Skylla-i (1+1): two outputs to charge 2 battery banks
The Skylla-i (1+1) features 2 isolated outputs. The second output, limited to approximately 4A and with a slightly lower output voltage, is intended to top up a starter battery.

Skylla-i (3): three full current outputs to charge 3 battery banks
The Skylla-i (3) features 3 isolated outputs. All outputs can supply the full rated output current.

Rugged
Aluminium epoxy powder coated cases with drip shield and stainless steel fixings withstand the rigors of an adverse environment: heat, humidity and salt air.
Circuit boards are protected with an acrylic coating for maximum corrosion resistance.
Temperature sensors ensure that power components will always operate within specified limits, if needed by automatic reduction of output current under extreme environmental conditions.

Flexible
Next to a CAN bus (NMEA2000) interface, a rotary switch, DIP switches and potentiometers are available to adapt the charge algorithm to a particular battery and its conditions of use.
Please refer to the manual for a complete overview of the possibilities.

Important features:

Synchronised parallel operation
Several chargers can be synchronised with the CAN bus interface. This is achieved by simply interconnecting the chargers with RJ45 UTP-cables. Please see the manual for details.

The right amount of charge for a lead-acid battery: variable absorption time
When only shallow discharges occur the absorption time is kept short in order to prevent overcharging of the battery. After a deep discharge the absorption time is automatically increased to make sure that the battery is completely recharged.

Preventing damage due to excessive gassing: the BatterySafe mode
If, in order to quickly charge a battery, a high charge current in combination with a high absorption voltage has been chosen, the Skylla-i will prevent damage due to excessive gassing by automatically limiting the rate of voltage increase once the gassing voltage has been reached.

Less maintenance and aging when the battery is not in use: the Storage mode
The storage mode kicks in whenever the battery has not been subjected to discharge during 24 hours. In the storage mode float voltage is reduced to 2,2V/cell (26,4V for 24V battery) to minimise gassing and corrosion of the positive plates. Once a week the voltage is raised back to the absorption level to 'refresh' the battery. This feature prevents stratification of the electrolyte and sulphation, a major cause of early battery failure.

To increase battery life: temperature compensation
Every Skylla-i comes with a battery temperature sensor. When connected, charge voltage will automatically decrease with increasing battery temperature. This feature is especially recommended for sealed lead-acid batteries and/or when important fluctuations of battery temperature are expected.

Battery voltage sense
In order to compensate for voltage loss due to cable resistance, the Skylla-i is provided with a voltage sense facility so that the battery always receives the correct charge voltage.

Suitable for AC and DC supply (AC-DC and DC-DC operation)
The chargers also accept a DC supply.

Use as a power supply
As a result of the perfectly stabilized output voltage, the Skylla-i can be used as a power supply if batteries or large buffer capacitors are not available.

Li-Ion (LiFePO4) ready
Simple charger on-off control can be implemented by connecting a relay or open collector optocoupler output from a Li-Ion BMS to the remote control port of the charger. Alternatively complete control of voltage and current can be achieved by connecting to the galvanically isolated CAN bus port.

Learn more about batteries and battery charging
To learn more about batteries and charging batteries, please refer to our book 'Energy Unlimited' (available free of charge from Victron Energy and downloadable from www.victronenergy.com).

Skylla-i	24/80 (1+1)	24/80 (3)	24/100 (1+1)	24/100 (3)
Input voltage (VAC)	230V			
Input voltage range (VAC)	185-265V			
Input voltage range (VDC)	180-350V			
Maximum AC input current @ 180 VAC	16A		20A	
Frequency (Hz)	45-65Hz			
Power factor	0,98			
Charge voltage 'absorption' (VDC) (1)	28,8V			
Charge voltage 'float' (VDC)	27,6V			
Charge voltage 'storage' (VDC)	26,4V			
Charge current (A) (2)	80A	3 x 80A (max total output: 80A)	100A	3 x 100A (max total output: 100A)
Charge current starter batt. (A)	4A	n. a.	4	n. a.
Charge algorithm	7 stage adaptive			
Battery capacity (Ah)	400-800Ah		500-1000Ah	
Charge algorithm, Li-Ion	3 stage, with on-off control or CAN bus control			
Temperature sensor	Yes			
Can be used as power supply	Yes			
Remote on-off port	Yes (can be connected to a Li-Ion BMS)			
CAN bus communication port (VE.Can)	Two RJ45 connectors, NMEA2000 protocol, galvanically isolated			
Synchronised parallel operation	Yes, with VE.Can			
Alarm relay	DPST AC rating: 240VAC/4A DC rating: 4A up to 35VDC, 1A up to 60VDC			
Forced cooling	Yes			
Protection	Battery reverse polarity (fuse) Output short circuit Over temperature			
Operating temp. range	-20 to 60°C (Full output current up to 40°C)			
Humidity (non-condensing)	max 95%			
ENCLOSURE				
Material & Colour	aluminium (blue RAL 5012)			
Battery-connection	M8 bolts			
230 VAC-connection	screw-clamp 10mm² (AWG 7)			
Protection category	IP 21			
Weight kg (lbs)	7kg (16 lbs)			
Dimensions hxwxd in mm (hxwxd in inches)	405 x 250 x 150 (16.0 x 9.9 x 5.9)			
STANDARDS				
Safety	EN 60335-1, EN 60335-2-29			
Emission	EN 55014-1, EN 61000-6-3, EN 61000-3-2			
Immunity	EN 55014-2, EN 61000-6-1, EN 61000-6-2, EN 61000-3-3			

1) Output voltage range 20-36V. Can be set with rotary switch or potentiometers.

2) Up to 40°C (100°F) ambient. Output will reduce to 80% at 50°C, and to 60% at 60°C.

BMV-700 Battery Monitor

The BMV-700 Battery Monitor features an advanced microprocessor control system combined with high resolution measuring systems for battery voltage and charge/discharge current.
The software includes complex calculation algorithms, like Peukert's formula, to exactly determine the state of charge of the battery.
The BMV-700 selectively displays battery voltage, battery current, consumed Ah or time to go.

Skylla-i Control

The Skylla-i Control panel provides remote control and monitoring of the charge process with LED status indication. In addition, the remote panel also offers input current adjustment that can be used to limit the input current and thus the power drawn from the AC supply. This is particularly useful when operating the charger from limited shore power or small gensets. The panel can also be used to change several battery charging parameters.
Several control panels can be connected to one charger or to a set of synchronised and parallel connected chargers.

Skylla TG 24 50

Skylla TG 24 50 3 phase

Skylla TG 24 100

Perfect chargers for any type of battery

Charge voltage can be precisely adjusted to suit any sealed or unsealed battery system.
In particular, sealed maintenance free batteries must be charged correctly in order to ensure a long service life.
Overvoltage will result in excessive gassing and venting of a sealed battery. The battery will dry out and fail.

Suitable for AC and DC supply (AC-DC and DC-DC operation)

Except for the 3-phase input models, the chargers also accept a DC supply.

Controlled charging

Every TG Charger has a microprocessor, which accurately controls the charging in three steps. The charging process takes place in accordance with the IUoUo characteristic and charges more rapidly than other processes.

Use of TG Chargers as a power supply

As a result of the perfectly stabilized output voltage, a TG Charger can be used as a power supply if batteries or large buffer capacitors are not available.

Two outputs to charge 2 battery banks (24V models only)

The TG Chargers feature 2 isolated outputs. The second output, limited to approximately 4A and with a slightly lower output voltage, is intended to top up a starter battery.

To increase battery life: temperature compensation

Every Skylla TG Charger comes with a battery temperature sensor. When connected, charge voltage will automatically decrease with increasing battery temperature. This feature is especially recommended for sealed batteries which otherwise might be overcharged and dry out due to venting.

Battery voltage sense

In order to compensate for voltage loss due to cable resistance, TG Chargers are provided with a voltage sense facility so that the battery always receives the correct charge voltage.

Learn more about batteries and battery charging

To learn more about batteries and charging batteries, please refer to our book 'Energy Unlimited' (available free of charge from Victron Energy and downloadable from www.victronenergy.com).

Charge curve

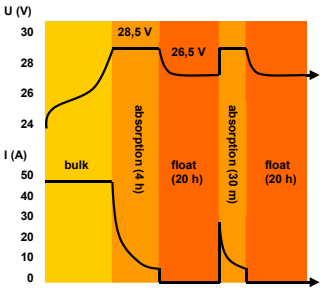

Application example

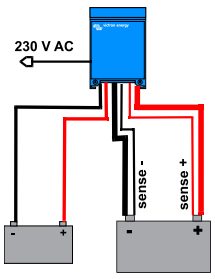

Skylla	24/30 TG 24/50 TG	24/50 TG 3 phase	24/80 TG	24/100 TG	24/100 TG 3 phase	48/25 TG	48/50 TG
Input voltage (V AC)	230	3 x 400	230	230	3 x 400	230	230
Input voltage range (V AC)	185-264	320-450	185-264	185-264	320-450	185-264	185-264
Input voltage range (V DC)	180-400	n. a.	180-400	180-400	n. a.	180-400	180-400
Frequency (Hz)	45-65						
Power factor	1						
Charge voltage 'absorption' (V DC)	28,5	28,5	28,5	28,5	28,5	57	57
Charge voltage 'float' (V DC)	26,5	26,5	26,5	26,5	26,5	53	53
Charge current house batt. (A) (2)	30 / 50	50	80	100	100	25	50
Charge current starter batt. (A)	4	4	4	4	4	n. a.	n. a.
Charge characteristic	IUoUo (three step)						
Battery capacity (Ah)	150-500	250-500	400-800	500-1000	500-1000	125-250	250-500
Temperature sensor	√						
Can be used as power supply	√						
Remote alarm	Potential free contacts 60V / 1A (1x NO and 1x NC)						
Forced cooling	√						
Protection (1)	a,b,c,d						
Operating temp. range	-40 to +50°C (-40 - 122°F)						
Humidity (non-condensing)	max 95%						
ENCLOSURE							
Material & Colour	aluminium (blue RAL 5012)						
Battery-connection	M8 studs						
230 V AC-connection	screw-clamp 2,5 mm² (AWG 6)						
Protection category	IP 21						
Weight kg (lbs)	5,5 (12.1)	13 (28)	10 (22)	10 (22)	23 (48)	5,5 (12.1)	10 (12.1)
Dimensions hxwxd in mm (hxwxd in inches)	365x250x147 (14.4x9.9x5.8)	365x250x257 (14.4x9.9x10.1)	365x250x257 (14.4x9.9x10.1)	365x250x257 (14.4x9.9x10.1)	515x260x265 (20x10.2x10.4)	365x250x147 (14.4x9.9x5.8)	365x250x257 (14.4x9.9x10.1)
STANDARDS							
Safety	EN 60335-1, EN 60335-2-29						
Emission	EN 55014-1, EN 61000-3-2						
Immunity	EN 55014-2, EN 61000-3-3						

1) Protection
   a. Output short circuit
   b. Battery reverse polarity detection
   c. Battery voltage too high
   d. Temperature too high
2) Up to 40°C (100°F) ambient

BMV-700 Battery Monitor

The BMV-700 Battery Monitor features an advanced microprocessor control system combined with high resolution measuring systems for battery voltage and charge/discharge current. Besides this, the software includes complex calculation algorithms, like Peukert's formula, to exactly determine the state of charge of the battery. The BMV-700 selectively displays battery voltage, current, consumed Ah or time to go.

Skylla Control

The Skylla Control allows you to alter the charge current and see the system status. Altering the charge current is useful if the shore power fuse is limited: the AC current drawn by the battery charger can be controlled by limiting the maximum output current, thereby preventing the shore power fuse from blowing.

Charger Switch

A remote on-off switch

Battery Alarm

An excessively high or low battery voltage is indicated by an audible and visual alarm.

Skylla charger 24V universal input and GL approval

Skylla Charger
24 V 50 A

Universal 90-265 V AC input voltage range and also suitable for DC supply

All models will operate without any adjustment needed over a 90 to 265 Volt input voltage range, whether 50 Hz or 60 Hz.
The chargers will also accept a 90-400 V DC supply.

Germanischer Lloyd approval

The Chargers have been approved by Germanischer Lloyd (GL) to environmental category C, EMC 1.
Category C applies to equipment protected from the weather.
EMC 1 applies to conducted and radiated emission limits for equipment installed on the bridge of a ship.

The approval to GL C, EMC1 implies that the Chargers also complies to IEC 60945-2002, category 'protected' and 'equipment installed on the bridge of a ship'.

The GL certification applies to 185-265 V AC supply.

Other features

- Microprocessor control
- Can be used as power supply
- Battery temperature sensor for temperature compensated charging
- Battery voltage sensing to compensate for voltage loss due to cable resistance

Other Skylla Chargers

- Standard 185-265 V AC models with additional output to charge a starter battery
- GMDSS models, with all required monitoring and alarm functions.

Learn more about batteries and battery charging

To learn more about batteries and charging batteries, please refer to our book 'Energy Unlimited' (available free of charge from Victron Energy and downloadable from www.victronenergy.com).

Charge curve

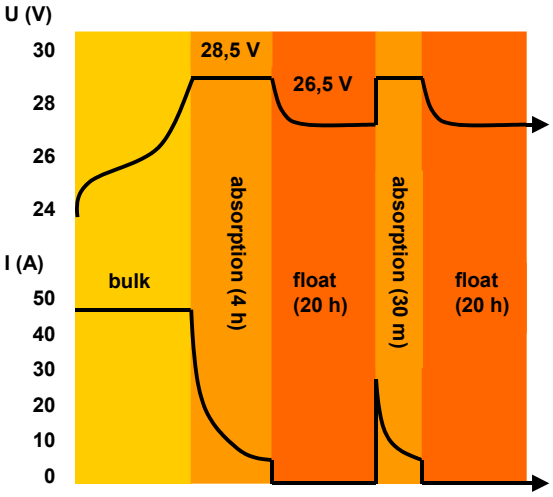

Skylla-TG	24/30 90-265 VAC	24/50 90-265 VAC	24/100-G 90-265 VAC
Input voltage (V AC)	230	230	230
Input voltage range (V AC)	90-265	90-265	90-265
Input voltage range (V DC)	90-400	90-400	90-400
Frequency (Hz)	45-65 Hz or DC		
Power factor	1		
Charge voltage 'absorption' (V DC)	28,5	28,5	28,5
Charge voltage 'float' (V DC)	26,5	26,5	26,5
Charge current house batt. (A) (2)	30 (limited to 22 A at 110V AC)	50	100
Charge current starter batt. (A)	4	4	4
Charge characteristic	IUoUo (three step)		
Battery capacity (Ah)	150-300	250-500	500-1000
Temperature sensor	√		
Can be used as power supply	√		
Remote alarm	Potential free contacts 60V / 1A (1x NO and 1x NC)		
Forced cooling	√		
Protection (1)	a, b, c, d		
Operating temp. range	-40 to +50°C (-40 - 122°F) (Full output current up to 40°C)		
Humidity (non-condensing)	max 95%		
ENCLOSURE			
Material & Colour	aluminium (blue RAL 5012)		
Battery-connection	M8 studs		
230 V AC-connection	screw-clamp 2,5 mm² (AWG 6)		
Protection category	IP 21		
Weight kg (lbs)	5,5 (12.1)	5,5 (12.1)	10 (22)
Dimensions hxwxd in mm (hxwxd in inches)	365 x 250 x 147 (14.4 x 9.9 x 5.8)	365 x 250 x 147 (14.4 x 9.9 x 5.8)	365 x 250 x 257 (14.4 x 9.9 x 10.1)
STANDARDS			
Vibration	0,7g (IEC 60945)		
Safety	EN 60335-1, EN 60335-2-29, IEC 60945		
Emission	EN 55014-1, EN 61000-3-2, IEC 60945		
Immunity	EN 55014-2, EN 61000-3-3, IEC 60945		
Germanischer Lloyd	Certificate 54 758 – 08HH		

1) Protection key:
a) Output short circuit
b) Battery reverse polarity detection
c) Battery voltage too high
d) Temperature too high

2) Up to 40°C (100°F) ambient

BMV-700 Battery Monitor
The BMV-700 Battery Monitor features an advanced microprocessor control system combined with high resolution measuring systems for battery voltage and charge/discharge current. Besides this, the software includes complex calculation algorithms, like Peukert's formula, to exactly determine the state of charge of the battery. The BMV-700 selectively displays battery voltage, current, consumed Ah or time to go.

Skylla Control
The Skylla Control allows you to alter the charge current and see the system status. Altering the charge current is useful if the shore power fuse is limited: the AC current drawn by the battery charger can be controlled by limiting the maximum output current, thereby preventing the shore power fuse from blowing.

Charger Switch
A remote on-off switch

Battery Alarm
An excessively high or low battery voltage is indicated by an audible and visual alarm.

Color Control GX

The Color Control (CCGX) provides intuitive control and monitoring for all Victron power systems. The list of Victron products that can be connected is endless: Inverters, Multis, Quattros, MPPT solar chargers, BMV battery monitors, Lynx Ion + Shunt and more.

VRM Online Portal

Besides monitoring and controlling products locally on the CCGX itself, all readings are also forwarded to our free remote monitoring website: the VRM Online Portal. To get an impression, try the demo on https://vrm.victronenergy.com. See also the screenshots below.

Remote Console on VRM

Monitor, control and configure the CCGX remotely, over the internet. Just like standing in front of the device, everything can also be done remotely. The same functionality is also available on the local network, Remote Console on LAN.

Automatic genset start/stop

A highly customizable start/stop system. Use state of charge, voltage, load and other parameters. Define a special set of rules for quiet times, and optionally a monthly test run.

The heart of ESS – Energy Storage System

The CCGX is the Energy Manager in an ESS system. More information in the ESS manual: https://www.victronenergy.com/live/ess:design-installation-manual

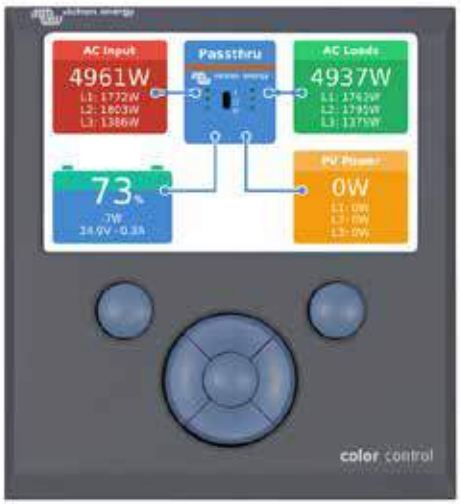

Data logging

When connected to the internet, all data is sent to the VRM Portal. When there is no internet connection available, the CCGX will store the data internally, up to 48 hours. By inserting a micro SD-card or USB stick, more data can be stored. These files can then be uploaded to the VRM Portal, or offline converted with the VictronConnect app, for analysis.

Supported products

- Multis and Quattros, including split-phase and three-phase systems. Monitoring and control (on/off and current limiter). Changing configuration is possible (only remotely via the internet, not without an internet connection).
- BlueSolar MPPT Solar Chargers with a VE.Direct port.
- BlueSolar MPPT 150/70 and the MPPT 150/85 with VE.Can port.
- SmartSolar MPPT 150/70 and the MPPT 150/100 with VE.Can port. When multiple BlueSolar MPPTs or SmartSolar MPPTs with VE.Can are used in parallel, all the information is combined as one. See also our blog-post about synchronizing multiple MPPT 150/70 solar chargers.
- BMV-700 family can be connected directly to the VE.Direct ports on the CCGX. Use the VE.Direct Cable for this.
- BMV-600 family can be connected to the VE.Direct ports on the CCGX. Requires an accessory cable.
- Lynx Ion + Shunt
- Lynx Shunt VE.Can
- Skylla-i battery chargers
- NMEA2000 tank sensors
- A USB GPS can be connected to the USB port. Location and speed will be visible on the display, and the data is sent to the VRM Portal for tracking purposes. The map on VRM will show the latest position.
- Fronius PV Inverters

When more than two VE.Direct products must be connected, USB can be used.

Internet connection

The CCGX can be connected to internet with an Ethernet cable and via wifi. To connect via wifi, a wifi USB accessory is required. The CCGX has no internal cellular modem: there is no slot for a sim-card. Use an off-the-shelf GPRS or 3G router instead. See the blog post about 3G routers.

Other highlights

- The CCGX can automatically update itself from the internet, when there is a new software version available.
- Multiple languages: English, Czech, German, Spanish, French, Italian, Dutch, Russian, Swedish, Turkish, Chinese, Arabic.
- Use the CCGX as a Modbus-TCP gateway to all connected Victron products. See our Modbus-TCP FAQ for more information.
- Powered by the Venus OS – embedded linux. https://github.com/victronenergy/venus/wiki/sales-pitch

Color Control GX			
Power supply voltage range	8 – 70V DC		
Current draw	12V DC	24V DC	48V DC
Display off	140mA	80mA	40mA
Display at minimum intensity	160mA	90mA	45mA
Display at maximum intensity	245mA	125mA	65mA
Potential free contact	3A / 30V DC / 250V AC (Normally open)		
	Communication ports		
VE.Direct	2 separate VE.Direct ports – isolated		
VE.Can	2 paralleled RJ45 sockets – isolated		
VE.Bus	2 paralleled RJ45 sockets – isolated		
USB	2 USB Host ports – not isolated		
Ethernet	10/100/1000MB RJ45 socket – isolated except shield		
	3rd party interfacing		
Modbus-TCP	Use Modbus-TCP to monitor and control all products connected to the Color Control GX		
JSON	Use the VRM JSON API to retrieve data from the VRM Portal		
	Other		
Outer dimensions (h x w x d)	130 x 120 x 28mm		
Operating temperature range	-20 to +50°C		
	Standards		
Safety	EN 60950-1:2005+A1:2009+A2:2013		
EMC	EN 61000-6-3, EN 55014-1, EN 61000-6-2, EN 61000-6-1, EN 55014-2		
Automotive	E4-10R-053535		

Overview - Multi with PV Inverter on output

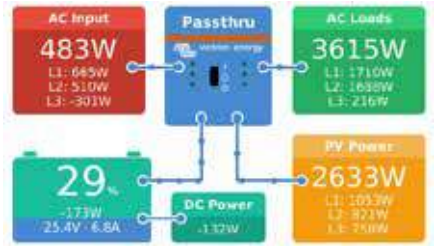

Main menu

Mobile & boat overview

Alarm notifications

Genset control page

Tiles overview

VRM Portal - Dashboard

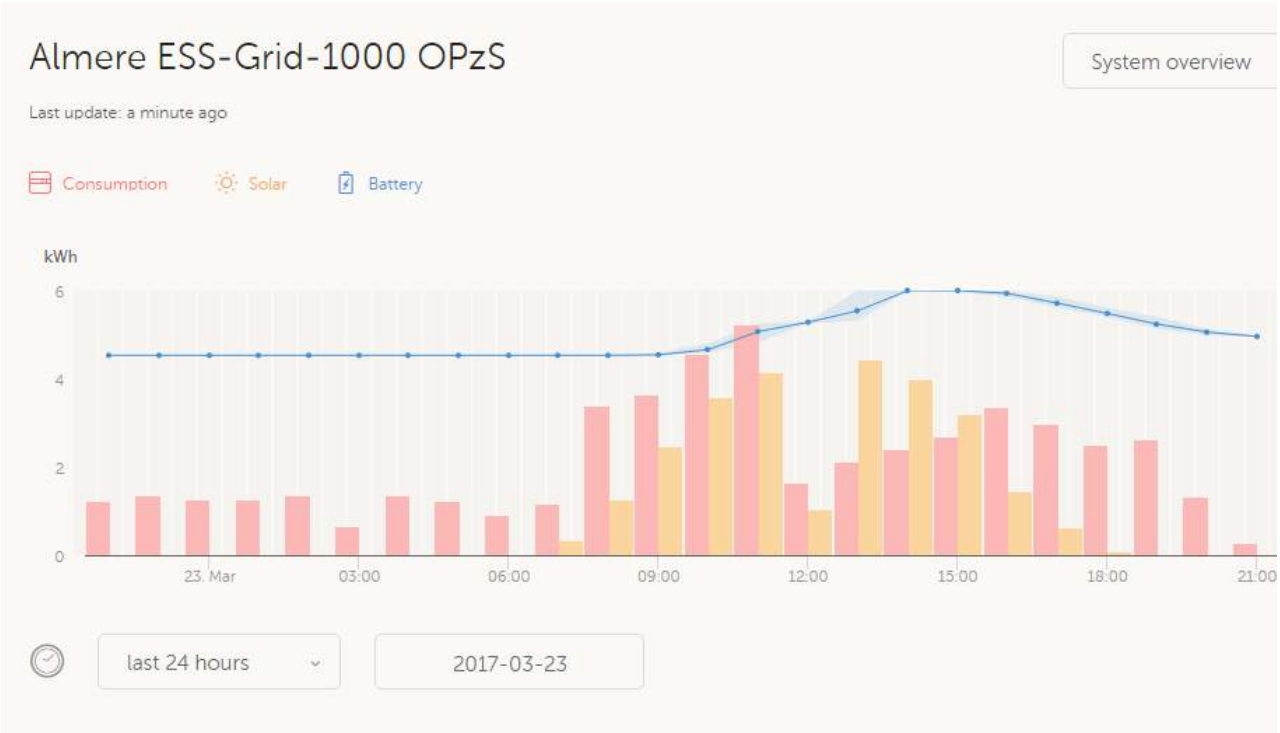

VRM Portal – Remote Console

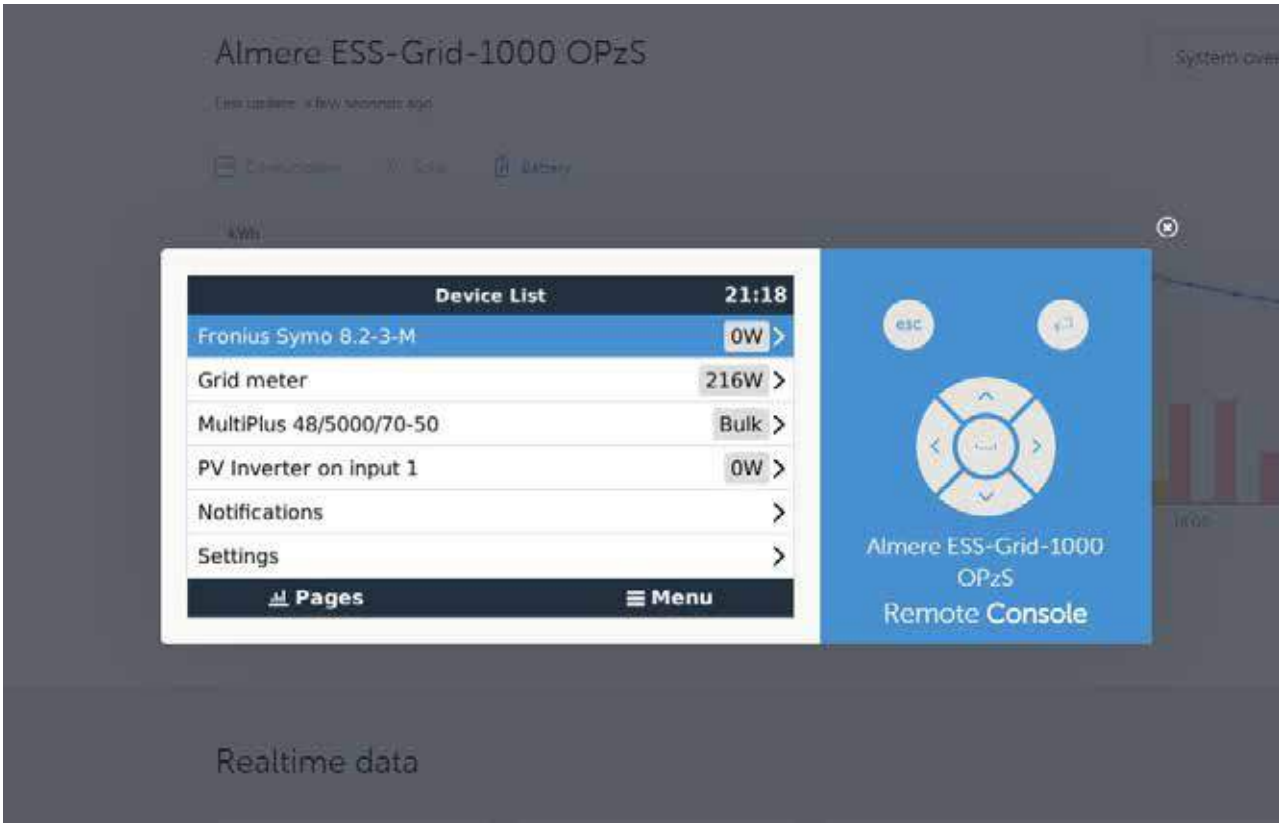

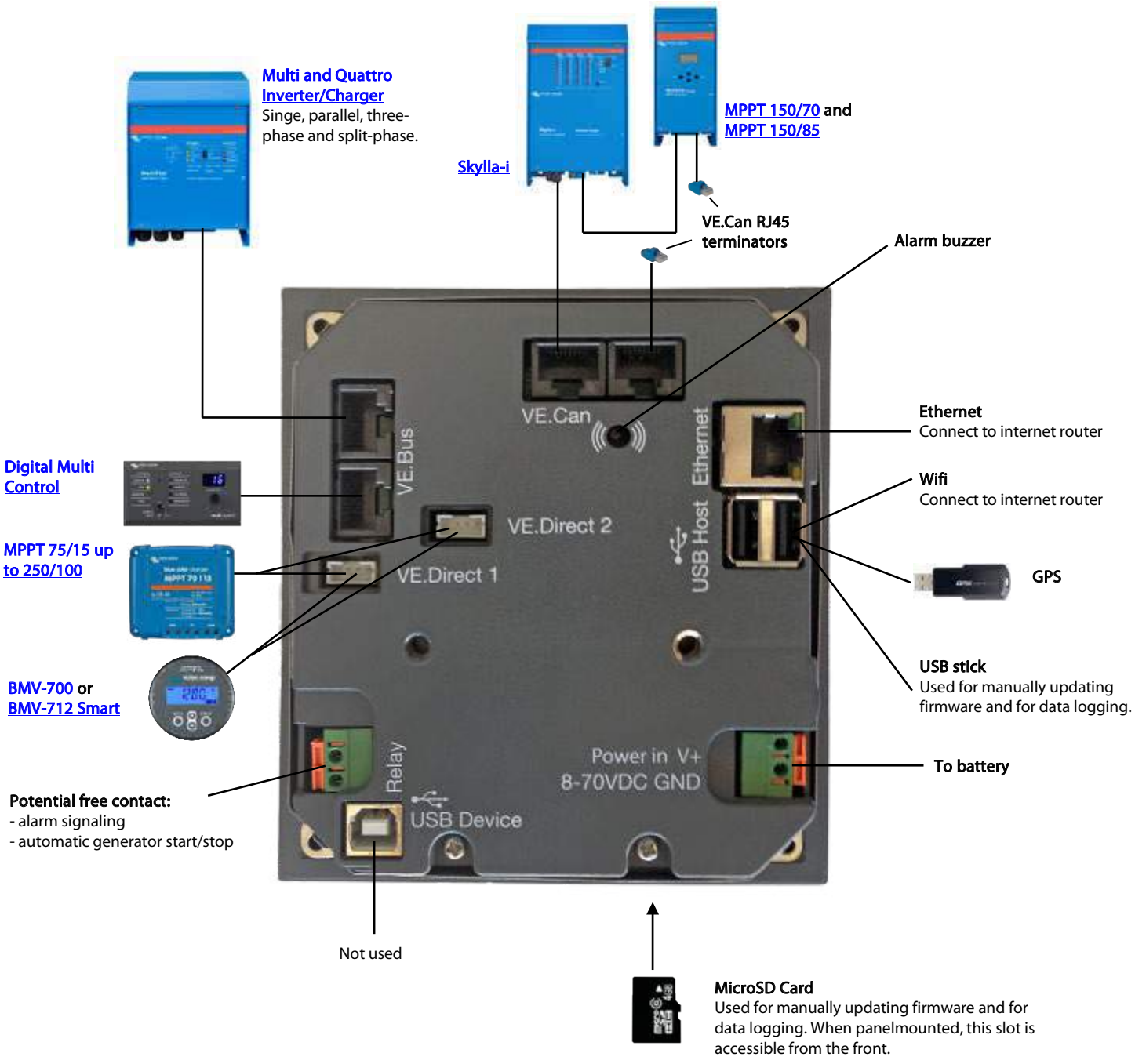
Multi and Quattro Inverter/Charger
Singe, parallel, three-phase and split-phase.
Skylla-i
MPPT 150/70 and MPPT 150/85
VE.Can RJ45 terminators
Alarm buzzer
VE.Can
VE.Bus
VE.Direct 2
VE.Direct 1
USB Host
Ethernet
Digital Multi Control
MPPT 75/15 up to 250/100
BMV-700 or BMV-712 Smart
Ethernet
Connect to internet router
Wifi
Connect to internet router
GPS
USB stick
Used for manually updating firmware and for data logging.
Relay
Power in V+
8-70VDC GND
To battery
Potential free contact:
- alarm signaling
- automatic generator start/stop
USB Device
Not used
MicroSD Card
Used for manually updating firmware and for data logging. When panelmounted, this slot is accessible from the front.

Venus GX

Venus GX with connectors

Venus GX front angle

Venus GX

The Venus GX provides intuitive control and monitoring for all Victron power systems. The list of Victron products that can be connected is endless: Inverters, Multis, Quattros, MPPT solar chargers, BMV battery monitors, Lynx Ion + Shunt and more.

VRM Online Portal

All readings are forwarded to our free remote monitoring website: the VRM Online Portal. To get an impression, try the demo on https://vrm.victronenergy.com. See also the screenshots below.

Remote Console on VRM

The way to access the device for setting up, as well as monitoring, is via Remote Console. Either via VRM, via the built-in WiFi Access Point, or on the local LAN/WiFi network.

Automatic genset start/stop

A highly customizable start/stop system. Use state of charge, voltage, load and other parameters. Define a special set of rules for quiet times, and optionally a monthly test run.

The heart of ESS – Energy Storage System

The Venus GX is the Energy Manager in an ESS system. More information in the ESS manual: https://www.victronenergy.com/live/ess:design-installation-manual

Data logging

When connected to the internet, all data is sent to the VRM Portal. When there is no internet connection available, the Venus GX will store the data internally, up to 48 hours. By inserting a micro SD-card or USB stick, more data can be stored. These files can then be uploaded to the VRM Portal, or offline converted with the VictronConnect app, for analysis.

Supported products

- Multis and Quattros, including split-phase and three-phase systems. Monitoring and control (on/off and current limiter). Changing configuration is possible (only remotely via the internet, not without an internet connection).
- EasySolar 1600VA
- BlueSolar MPPT Solar Chargers with a VE.Direct port.
- BlueSolar MPPT 150/70 and the MPPT 150/85 with VE.Can port.
- SmartSolar MPPT 150/70 and the MPPT 150/100 with VE.Can port. When multiple BlueSolar MPPTs or SmartSolar MPPTs with VE.Can are used in parallel, all the information is combined as one. See also our blog-post about synchronizing multiple MPPT 150/70 solar chargers.
- BMV-700 family can be connected directly to the VE.Direct ports on the Venus GX. Use the VE.Direct Cable for this.
- BMV-600 family can be connected to the VE.Direct ports on the Venus GX. Requires an accessory cable.
- Lynx Ion + Shunt
- Lynx Ion BMS
- Lynx Shunt VE.Can
- Skylla-i battery chargers
- NMEA2000 tank sensors
- A USB GPS can be connected to the USB port. The data is sent to the VRM Portal for tracking purposes. The map on VRM will show the latest position.
- Fronius PV Inverters

When more than two VE.Direct products must be connected, USB can be used.

Internet connection

The Venus GX can be connected to internet with an Ethernet cable and via Wi-Fi. The Venus GX has no internal cellular modem: there is no slot for a sim-card. Use an off-the-shelf GPRS or 3G router instead. See the blog post about 3G routers.

Tank level inputs

The tank level inputs are resistive: connect them to a resistive tank sender. Such tank senders are not supplied by Victron. The tank level ports can each be configured to work with either European tank senders (0 - 180 Ohm), or US (240 - 30 Ohm).

Other highlights

- The Venus GX can automatically update itself from the internet, when there is a new software version available.
- Multiple languages: English, Czech, German, Spanish, French, Italian, Dutch, Russian, Swedish, Turkish, Chinese, Arabic.
- Use the Venus GX as a Modbus-TCP gateway to all connected Victron products. See our Modbus-TCP FAQ for more information.
- Powered by the Venus OS – embedded linux. https://github.com/victronenergy/venus/wiki/sales-pitch

Venus GX			
Power supply voltage range	8 – 70V DC		
Current Draw	210 mA @ 12V	110 mA @ 24V	60 mA @ 48V
Communication ports			
VE.Direct	2 separate VE.Direct ports – isolated		
VE.Can	2 paralleled RJ45 sockets – isolated		
CAN	2nd CAN interface – non isolated		
VE.Bus	2 paralleled RJ45 sockets – isolated		
USB	2 USB Host ports – not isolated		
Ethernet	10/100/1000MB RJ45 socket – isolated except shield		
WiFi Access Point	Use to connect to Remote Console		
WiFi Client	Connect the Venux GX to an existing WiFi network		
IO			
Potential free contact	NO/COM/NC – 6 A 250 VAC/30 VDC		
Tank level inputs	3 x Configurable for European (0 - 180 Ohm) or US (240 - 30 Ohm)		
Temperature level inputs	2 x Requires ASS000001000.		
3rd party interfacing			
Modbus-TCP	Use Modbus-TCP to monitor and control all products connected to the Venus GX		
JSON	Use the VRM JSON API to retrieve data from the VRM Portal		
Other			
Outer dimensions (h x w x d)	45 x 143 x 96		
Operating temperature range	-20 to +50°C		
Standards			
Safety	EN 60950-1:2005+A1:2009+A2:2013		
EMC	EN 61000-6-3, EN 55014-1, EN 61000-6-2, EN 61000-6-1, EN 55014-2		
Automotive	In progress		

BMV-700 series: Precision battery monitoring

BMV-700

BMV bezel square

BMV shunt 500A/50mV
With quick connect pcb

BMV-702 Black

BMV-700H

Battery 'fuel gauge', time-to-go indicator, and much more

The remaining battery capacity depends on the ampere-hours consumed, discharge current, temperature and the age of the battery. Complex software algorithms are needed to take all these variables into account.

Next to the basic display options, such as voltage, current and ampere-hours consumed, the BMV-700 series also displays state of charge, time to go, and power consumption in Watts.

The BMV-702 features an additional input which can be programmed to measure the voltage (of a second battery), battery temperature or midpoint voltage (see below).

Bluetooth Smart

Use the Bluetooth Smart dongle to monitor your batteries on Apple or Android smartphones, tablets, macbooks and other devices.

Easy to install

All electrical connections are to the quick connect PCB on the current shunt. The shunt connects to the monitor with a standard RJ12 telephone cable. Included: RJ 12 cable (10 m) and battery cable with fuse (2 m); no other components needed.

Also included are a separate front bezel for a square or round display appearance, a securing ring for the rear mounting and screws for the front mounting.

Easy to program (with your smartphone!)

A quick install menu and a detailed setup menu with scrolling texts assist the user when going through the various settings.

Alternatively, choose the fast and easy solution: download the smartphone app (Bluetooth Smart dongle needed)

Midpoint voltage monitoring (BMV-702 only)

This feature, which is often used in industry to monitor large and expensive battery banks, is now for the first time made available at a low cost, to monitor any battery bank.

A battery bank consists of a string of series connected cells. The midpoint voltage is the voltage halfway along the string. Ideally, the midpoint voltage would be exactly half of the total voltage. In practice, however, deviations will be seen, that depend on many factors such as a different state of charge for new batteries or cells, different temperatures, internal leakage currents, capacities and much more.

Large or increasing deviation of the midpoint voltage, points to improper battery care or a failed battery or cell. Corrective action following a midpoint voltage alarm can prevent severe damage to an expensive battery. Please consult the BMV manual for more information.

Standard features

- Battery voltage, current, power, ampere-hours consumed and state of charge
- Remaining time at the current rate of discharge
- Programmable visual and audible alarm
- Programmable relay, to turn off non critical loads or to run a generator when needed
- 500 Amp quick connect shunt and connection kit
- Shunt selection capability up to 10.000 Amps
- VE.Direct communication port
- Stores a wide range of historical events, which can be used to evaluate usage patterns and battery health
- Wide input voltage range: 6,5 – 95V
- High current measurement resolution: 10 mA (0,01A)
- Low current consumption: 2,9Ah per month (4mA) @12V and 2,2Ah per month (3mA) @ 24V

BMV-702 additional features

Additional input to measure voltage (of a second battery), temperature or midpoint voltage, and corresponding alarm and relay settings.

BMV-700H: 60 to 385 VDC voltage range

No additional parts needed. Note: suitable for systems with grounded negative only (battery monitor is not isolated from shunt).

Other battery monitoring options

- Lynx Shunt VE.Can

More about midpoint voltage

One bad cell or one bad battery can destroy a large, expensive battery bank. When batteries are connected in series, a timely warning can be generated by measuring the midpoint voltage. Please see the BMV manual, section 5.2, for more information.
We recommend our Battery Balancer (BMS012201000) to maximize service life of series-connected batteries.

Battery Monitor	BMV-700	BMV-702 BMV-702 BLACK	BMV-700H
Supply voltage range	6,5 - 95 VDC	6,5 - 95 VDC	60 – 385 VDC
Current draw, back light off	< 4mA	< 4mA	< 4mA
Input voltage range, auxiliary battery	n. a.	6,5 - 95 VDC	n. a.
Battery capacity (Ah)	1 - 9999 Ah		
Operating temperature range	-40 +50°C (-40 - 120°F)		
Measures voltage of second battery, or temperature, or midpoint	No	Yes	No
Temperature measurement range	-20 +50°C		n. a.
VE.Direct communication port	Yes	Yes	Yes
Relay	60V / 1A normally open (function can be inverted)		
RESOLUTION & ACCURACY (with a 500 A shunt)			
Current	± 0,01A		
Voltage	± 0,01V		
Amp hours	± 0,1 Ah		
State of charge (0 – 100%)	± 0,1%		
Time to go	± 1 min		
Temperature (0 - 50°C or 30 - 120°F)	n. a.	± 1°C/°F	n. a.
Accuracy of current measurement	± 0,4%		
Accuracy of voltage measurement	± 0,3%		
INSTALLATION & DIMENSIONS			
Installation	Flush mount		
Front	63mm diameter		
Front bezel	69 x 69mm (2.7 x 2.7 inch)		
Body diameter and depth	52mm (2.0 inch) and 31mm (1.2 inch)		
Protection category	IP55 (not intended for outdoor use)		
STANDARDS			
Safety	EN 60335-1		
Emission / Immunity	EN 55014-1 / EN 55014-2		
Automotive	ECE R10-4 / EN 50498		
ACCESSORIES			
Shunt (included)	500A / 50mV		
Cables (included)	10 meter 6 core UTP with RJ12 connectors, and cable with fuse for '+' connection		
Temperature sensor	Optional (ASS000100000)		

1000A/50mV, 2000A/50mV and 6000A/50mV shunt
The quick connect PCB on the standard 500A/50mV shunt can also be mounted on these shunts.

Interface cables
- VE.Direct cables to connect a BMV 70x to the Color Control (ASS030530xxx)
- VE.Direct to USB interface (ASS030530000) to connect several BMV 70x to a Color Control GX or to a computer.

With the **VE.Direct to Bluetooth Smart dongle** real time data and alarms can be displayed on Apple and Android smartphones, tablets, macbooks and other devices.

Also use your smartphone to adjust settings!

(the VE.Direct to Bluetooth Smart dongle must be ordered separately)

See the VictronConnect BMV app Discovery Sheet for more screenshots

Color Control
The powerful Linux computer, hidden behind the colour display and buttons, collects data from all Victron equipment and shows it on the display. Besides communicating with Victron equipment, the Color Control communicates through CAN bus (NMEA2000), Ethernet and USB.
Data can be stored and analysed on the VRM Portal.

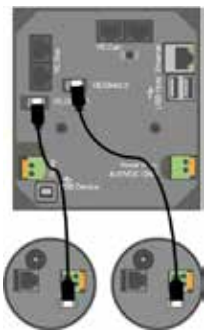

Temperature sensor

A maximum of four BMVs can be connected directly to a Color Control GX.
Even more BMVs can be connected to a USB Hub for central monitoring.

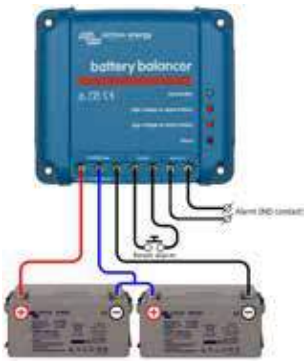

Battery Balancer (BMS012201000)
The Battery Balancer equalizes the state of charge of two series connected 12V batteries, or of several parallel strings of series connected batteries.
When the charge voltage of a 24V battery system increases to more than 27V, the Battery Balancer will turn on and compare the voltage over the two series connected batteries. The Battery Balancer will draw a current of up to 1A from the battery (or parallel connected batteries) with the highest voltage. The resulting charge current differential will ensure that all batteries will converge to the same state of charge.

If needed, several balancers can be paralleled.

A 48V battery bank can be balanced with three Battery Balancers.

BMV-712 Smart: Bluetooth inside

BMV-712 Smart

BMV bezel square

BMV shunt 500A/50mV
With quick connect pcb

See the VictronConnect BMV app Discovery Sheet for more screenshots

Bluetooth inside

With Bluetooth built-in, the BMV Smart is ready for the Internet of Things (IoT) era. With Bluetooth being implemented in most other Victron Energy products, wireless communication between products will simplify system installation and enhance performance.

Download the Victron Bluetooth app

Use a smartphone or other Bluetooth enabled device to

- customize settings,
- monitor all important data on single screen,
- view historical data, and to
- update the software when new features become available.

Easy to install

All electrical connections are to the quick connect PCB on the current shunt. The shunt connects to the monitor with a standard RJ12 telephone cable. Included: RJ 12 cable (10 m) and battery cable with fuse (2 m); no other components needed.

Also included are a separate front bezel for a square or round display appearance, a securing ring for rear mounting and screws for front mounting.

Midpoint voltage monitoring

One bad cell or one bad battery can destroy a large, expensive battery bank. When batteries are connected in series, a timely warning can be generated by measuring the midpoint voltage. Please see the BMV manual, section 5.2, for more information.
We recommend our **Battery Balancer** (BMS012201000) to maximize service life of series-connected lead-acid batteries.

Very low current draw from the battery

Current consumption: 0,7Ah per month (1mA) @12V and 0,6Ah per month (0,8mA) @ 24V
Especially Li-ion batteries have virtually no capacity left when discharged until low voltage shutdown. After shutdown due to low cell voltage, the capacity reserve of a Li-ion battery is approximately 1Ah per 100Ah battery capacity. The battery will be damaged if the remaining capacity reserve is drawn from the battery. A residual current of 10mA for example may damage a 200Ah battery if the system is left in discharged state during more than 8 days.

Bi-stable alarm relay

Prevents increased current draw in case of an alarm.

Other features

- Battery voltage, current, power, ampere-hours consumed and state of charge
- Remaining time at the current rate of discharge
- Programmable visual and audible alarm
- Programmable relay, to turn off non critical loads or to run a generator when needed
- 500 Amp quick connect shunt and connection kit
- Shunt selection capability up to 10.000 Amps
- VE.Direct communication port
- Stores a wide range of historical events, which can be used to evaluate usage patterns and battery health
- Wide input voltage range: 6,5 – 70V
- High current measurement resolution: 10 mA (0,01A)
- Additional input to measure voltage (of a second battery), temperature or midpoint voltage, and corresponding alarm and relay settings

Battery Monitor	BMV-712 Smart
Supply voltage range	6,5 - 70 VDC
Current draw, back light off	< 1mA
Input voltage range, auxiliary battery	6,5 - 70 VDC
Battery capacity (Ah)	1 - 9999 Ah
Operating temperature range	-40 +50°C (-40 - 120°F)
Measures voltage of second battery, or temperature, or midpoint	Yes
Temperature measurement range	-20 +50°C
VE.Direct communication port	Yes
Bistable relay	60V / 1A normally open (function can be inverted)
RESOLUTION & ACCURACY (with a 500 A shunt)	
Current	± 0,01A
Voltage	± 0,01V
Amp hours	± 0,1 Ah
State of charge (0 – 100%)	± 0,1%
Time to go	± 1 min
Temperature (0 - 50°C or 30 - 120°F)	± 1°C/°F
Accuracy of current measurement	± 0,4%
Accuracy of voltage measurement	± 0,3%
INSTALLATION & DIMENSIONS	
Installation	Flush mount
Front	63mm diameter
Front bezel	69 x 69mm (2.7 x 2.7 inch)
Body diameter and depth	52mm (2.0 inch) and 31mm (1.2 inch)
Protection category	IP55 (not intended for outdoor use)
STANDARDS	
Safety	EN 60335-1
Emission / Immunity	EN 55014-1 / EN 55014-2
Automotive	ECE R10-4 / EN 50498
ACCESSORIES	
Shunt (included)	500A / 50mV
Cables (included)	10 meter 6 core UTP with RJ12 connectors, and cable with fuse for '+' connection
Temperature sensor	Optional (ASS000100000)

1000A/50mV, 2000A/50mV and 6000A/50mV shunt
The quick connect PCB on the standard 500A/50mV shunt can also be mounted on these shunts.

Interface cables
- VE.Direct cables to connect a BMV 712 to the Color Control (ASS030530xxx)
- VE.Direct to USB interface (ASS030530000) to connect several BMV 70x to a Color Control GX or to a computer.

Temperature sensor

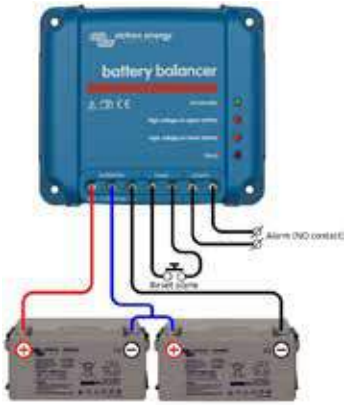

Battery Balancer (BMS012201000)
The Battery Balancer equalizes the state of charge of two series connected 12V batteries, or of several parallel strings of series connected batteries.
When the charge voltage of a 24V battery system increases to more than 27V, the Battery Balancer will turn on and compare the voltage over the two series connected batteries. The Battery Balancer will draw a current of up to 1A from the battery (or parallel connected batteries) with the highest voltage. The resulting charge current differential will ensure that all batteries will converge to the same state of charge.

If needed, several balancers can be paralleled.

A 48V battery bank can be balanced with three Battery Balancers.

Color Control
The powerful Linux computer, hidden behind the colour display and buttons, collects data from all Victron equipment and shows it on the display. Besides communicating with Victron equipment, the Color Control communicates through CAN bus (NMEA2000), Ethernet and USB.
Data can be stored and analysed on the VRM Portal.

A maximum of four BMVs can be connected directly to a Color Control GX.
Even more BMVs can be connected to a USB Hub for central monitoring.

Venus GX
The Venus GX provides intuitive control and monitoring. It has the same functionality as the Color Control GX, with a few extras:
- lower cost, mainly because it has no display or buttons
- 3 tank sender inputs
- 2 temperature inputs

BlueSolar monocrystalline panels

BlueSolar Monocrystalline 305W

- Low voltage-temperature coefficient enhances high-temperature operation.
- Exceptional low-light performance and high sensitivity to light across the entire solar spectrum.
- 25-Year limited warranty on power output and performance.
- 5-Year limited warranty on materials and workmanship.
- Sealed, waterproof, multi-functional junction box gives high level of safety.
- High performance bypass diodes minimize the power drop caused by shade.
- Advanced EVA (Ethylene Vinyl Acetate) encapsulation system with triple-layer back sheet meets the most stringent safety requirements for high-voltage operation.
- A sturdy, anodized aluminium frame allows modules to be easily roof-mounted with a variety of standard mounting systems.
- Highest quality, high-transmission tempered glass provides enhanced stiffness and impact resistance.
- High power models with pre-wired quick-connect system with MC4 (PV-ST01) connectors.

MC4 connectors

Article Number	Description	Net Weight	Electrical data under STC (1)				
			Nominal Power	Max-Power Voltage	Max-Power Current	Open-Circuit Voltage	Short-Circuit Current
			Pmpp	Vmpp	Impp	Voc	Isc
		Kg	W	V	A	V	A
SPM040201200	20W-12V Mono 440 x 350 x 25mm series 4a	1.9	20	18.5	1.09	22.6	1.19
SPM040301200	30W-12V Mono 560 x 350 x 25mm series 4a	2.2	30	18.7	1.61	22.87	1.76
SPM040401200	40W-12V Mono 425 x 668 x 25mm series 4a	3.1	40	18.3	2.19	22.45	2.40
SPM040551200	55W-12V Mono 545 x 668 x 25mm series 4a	4	55	18.8	2.94	22.9	3.22
SPM040901200	90W-12V Mono 780 x 668 x 30mm series 4a	6.1	90	19.6	4.59	24.06	5.03
SPM041151200	115W-12V Mono 1015 x 668 x 30mm series 4a	8	115	19.0	6.04	23.32	6.61
SPM041751200	175W-12V Mono 1485 x 668 x 30mm series 4a	11	175	19.4	9.03	23.7	9.89
SPM042152400	215W-24V Mono 1580 x 808 x 35mm series 4a	15	215	37.4	5.75	45.82	6.30
SPM043052000	305W-20V Mono 1640 x 992 x 35mm series 4a	18	305	32.5	9.38	39.7	10.27
SPM043602400	360W-24V Mono 1956 x 992 x 40mm series 4a	22	360	38.4	9.38	47.4	10.24

Module	SPM 040201200	SPM 040301200	SPM 04040120	SPM 040551200	SPM 040901200	SPM 041151200	SPM 041751200	SPM 042152400	SPM 043052000	SPM 043602400
Nominal Power (±3% tolerance)	20W	30W	40W	55W	90W	115W	175W	215W	305W	360W
Cell type	Monocrystalline									
Number of cells in series	36							72	60	72
Maximum system voltage	1000V									
Temperature coefficient of MPP (%)	-0.45/°C	-0.45/°C	-0.45/°C	-0.45/°C	-0.45/°C	-0.45/°C	-0.45/°C	-0.45/°C	-0.45/°C	-0.45/°C
Temperature coefficient of Voc (%)	-0.35/°C	-0.35/°C	-0.35/°C	-0.35/°C	-0.35/°C	-0.35/°C	-0.35/°C	-0.35/°C	-0.35/°C	-0.35/°C
Temperature coefficient of Isc (%)	+0.04/°C	+0.04/°C	+0.04/°C	+0.04/°C	+0.04/°C	+0.04/°C	+0.04/°C	+0.04/°C	+0.04/°C	+0.04/°C
Temperature Range	-40°C to +85°C									
Surface Maximum Load Capacity	200 kg/m²									
Allowable Hail Load	23 m/s, 7.53 g									
Junction Box Type	PV-LH0805	PV-LH0806			PV-LH0801	PV-LH0808		PV-LH0701	PV-JB002	
Length of Cables / Connector Type	No cable				900 mm MC4					
Output tolerance	+/-3%									
Frame	Aluminium									
Product warranty	5 years									
Warranty on electrical performance	10 years 90% + 25 years 80% of power output									

BlueSolar Polycrystalline 175W

- Low voltage-temperature coefficient enhances high-temperature operation.
- Exceptional low-light performance and high sensitivity to light across the entire solar spectrum.
- 25-Year limited warranty on power output and performance.
- 5-Year limited warranty on materials and workmanship.
- Sealed, waterproof, multi-functional junction box gives high level of safety.
- High performance bypass diodes minimize the power drop caused by shade.
- Advanced EVA (Ethylene Vinyl Acetate) encapsulation system with triple-layer back sheet meets the most stringent safety requirements for high-voltage operation.
- A sturdy, anodized aluminium frame allows modules to be easily roof-mounted with a variety of standard mounting systems.
- Highest quality, high-transmission tempered glass provides enhanced stiffness and impact resistance.
- High power models with pre-wired quick-connect system with MC4 (PV-ST01) connectors.

MC4 connectors

Article Number	Description	Net weight	Electrical data under STC (1)				
			Nominal Power	Max-Power Voltage	Max-Power Current	Open-Circuit Voltage	Short-Circuit Current
			P_{MPP}	V_{MPP}	I_{MPP}	Voc	Isc
		Kg	W	V	A	V	A
SPP040201200	20W-12V Poly 440 x 350 x 25mm series 4a	1.9	20	18.4	1.09	21.96	1.18
SPP040301200	30W-12V Poly 655 x 350 x 25mm series 4a	2.8	30	18.2	1.66	21.80	1.80
SPP040451200	45W-12V Poly 425 x 668 x 25mm series 4a	3.1	45	19.1	2.36	22.90	2.55
SPP040601200	60W-12V Poly 545 x 668 x 25mm series 4a	4	60	19.3	3.12	23.10	3.37
SPP040901200	90W-12V Poly 780 x 668 x 30mm series 4a	6.1	90	19.5	4.61	23.44	4.98
SPP041151200	115W-12V Poly 1015 x 668 x 30mm series 4a	8	115	18.94	6.08	22.73	6.56
SPP041751200	175W-12V Poly 1485 x 668 x 30mm series 4a	12	175	18,3	9.56	21.9	10.24
SPP032602000	260W-20V Poly 1640 x 992 x 40mm series 3a	17	260	30	8.66	36.75	9.30
SPP042702000	270W-20V Poly 1640 x 992 x 35mm series 4a	18.4	270	31.7	8.52	38.04	9.21
SPP043302400	330W-24V Poly 1956 x 992 x 40mm series 4a	22.5	330	37.3	8.86	44.72	9.57

Module	SPP 040201200	SPP 040301200	SPP 040451200	SPP 040601200	SPP 040901200	SPP 041151200	SPP 041751200	SPP 032601200	SPP 042702000	SPP 043302400
Nominal Power (± 3% tolerance)	20W	30W	45W	60W	90W	115W	175W	260W	270W	330W
Cell type	Polycrystalline									
Number of cells in series	36							60	60	72
Maximum system voltage (V)	1000V									
Temperature coefficient of PMPP (%)	-0.45/°C	-0.45/°C	-0.45/°C	-0.45/°C	-0.45/°C	-0.45/°C	-0.45/°C	-0.45/°C	-0.47/°C	-0.45/°C
Temperature coefficient of Voc (%)	-0.35/°C	-0.35/°C	-0.35/°C	-0.35/°C	-0.35/°C	-0.35/°C	-0.35/°C	-0.35/°C	-0.34/°C	-0.35/°C
Temperature coefficient of Isc (%)	+0.04/°C	+0.04/°C	+0.04/°C	+0.04/°C	+0.04/°C	+0.04/°C	+0.04/°C	+0.04/°C	+0.045/°C	+0.04/°C
Temperature Range	-40°C to +85°C									
Surface Maximum Load Capacity	200 kg/m²									
Allowable Hail Load	23 m/s, 7.53 g									
Junction Box Type	PV-LH0805	PV-LH0806			PV-LH0801	PV-LH0808			PV-JB002	
Length of Cable / connector	No cable				900 mm / MC4					
Output tolerance	+/-3%									
Frame	Aluminium									
Product warranty	5 years									
Warranty on electrical performance	10 years 90% + 25 years 80% of power output									
Smallest packaging unit	1 panel									
Quantity per pallet	380	240	180	140	90	80	36	20	32	37

1) STC (Standard Test Conditions): 1000 W/m², 25°C, AM (Air Mass) 1.5

BlueSolar & Smartsolar charge controllers MPPT - Overview

BlueSolar Charge Controller	Load output	Battery voltage	Optional display	Bluetooth	Com. port	Remote on-off	Programmable relay	Wire Box
75/10	15A	12/24	MPPT control	Optional dongle	VE.Direct	No	No	S 75-10/15
75/15	15A	12/24	MPPT control	Optional dongle	VE.Direct	No	No	S 75-10/15
100/15	15A	12/24	MPPT control	Optional dongle	VE.Direct	No	No	S 100-15
100/30	No	12/24	MPPT control	Optional dongle	VE.Direct	No	No	M
100/50	No	12/24	MPPT control	Optional dongle	VE.Direct	No	No	M
150/35	No	12/24/36/48	MPPT control	Optional dongle	VE.Direct	No	No	M
150/45-Tr	No	12/24/36/48	MPPT control	Optional dongle	VE.Direct	No	No	L
150/45-MC4	No	12/24/36/48	MPPT control	Optional dongle	VE.Direct	No	No	L
150/60-Tr	No	12/24/36/48	MPPT control	Optional dongle	VE.Direct	No	No	L
150/60-MC4	No	12/24/36/48	MPPT control	Optional dongle	VE.Direct	No	No	L
150/70-Tr	No	12/24/36/48	MPPT control	Optional dongle	VE.Direct	No	No	L
150/70-MC4	No	12/24/36/48	MPPT control	Optional dongle	VE.Direct	No	No	L
SmartSolar Charge Controller	**Load output**	**Battery voltage**	**Optional display**	**Bluetooth**	**Com. port**	**Remote on-off**	**Programmable relay**	**Wire Box**
75/10	15A	12/24	MPPT control	Built-in	VE.Direct	No	No	S 75-10/15
75/15	15A	12/24	MPPT control	Built-in	VE.Direct	No	No	S 75-10/15
100/15	15A	12/24	MPPT control	Built-in	VE.Direct	No	No	S 100-15
100/20	20A	12/24	MPPT control	Built-in	VE.Direct	No	No	S 100-20
100/20-48V	1A	48	MPPT control	Built-in	VE.Direct	No	No	S 100-20
100/30	No	12/24	MPPT control	Built-in	VE.Direct	No	No	M
100/50	No	12/24	MPPT control	Built-in	VE.Direct	No	No	M
150/35	No	12/24/36/48	MPPT control	Built-in	VE.Direct	No	No	M
150/45-Tr	No	12/24/36/48	MPPT ctrl & SmartSolar ctrl	Built-in	VE.Direct	Yes	Yes	L
150/45-MC4	No	12/24/36/48	MPPT ctrl & SmartSolar ctrl	Built-in	VE.Direct	Yes	Yes	L
150/60-Tr	No	12/24/36/48	MPPT ctrl & SmartSolar ctrl	Built-in	VE.Direct	Yes	Yes	L
150/60-MC4	No	12/24/36/48	MPPT ctrl & SmartSolar ctrl	Built-in	VE.Direct	Yes	Yes	L
150/70-Tr	No	12/24/36/48	MPPT ctrl & SmartSolar ctrl	Built-in	VE.Direct	Yes	Yes	L
150/70-MC4	No	12/24/36/48	MPPT ctrl & SmartSolar ctrl	Built-in	VE.Direct	Yes	Yes	L
150/70-Tr-CAN	No	12/24/36/48	MPPT ctrl & SmartSolar ctrl	Built-in	VE.Direct & VE.Can	Yes	Yes	L
150/85-Tr	No	12/24/36/48	MPPT ctrl & SmartSolar ctrl	Built-in	VE.Direct	Yes	Yes	XL
150/85-MC4	No	12/24/36/48	MPPT ctrl & SmartSolar ctrl	Built-in	VE.Direct	Yes	Yes	XL
150/100-Tr	No	12/24/36/48	MPPT ctrl & SmartSolar ctrl	Built-in	VE.Direct	Yes	Yes	XL
150/100-MC4	No	12/24/36/48	MPPT ctrl & SmartSolar ctrl	Built-in	VE.Direct	Yes	Yes	XL
150/100-Tr-CAN	No	12/24/36/48	MPPT ctrl & SmartSolar ctrl	Built-in	VE.Direct & VE.Can	Yes	Yes	XL
250/60-Tr	No	12/24/36/48	MPPT ctrl & SmartSolar ctrl	Built-in	VE.Direct	Yes	Yes	L
250/60-MC4	No	12/24/36/48	MPPT ctrl & SmartSolar ctrl	Built-in	VE.Direct	Yes	Yes	L
250/70-Tr	No	12/24/36/48	MPPT ctrl & SmartSolar ctrl	Built-in	VE.Direct	Yes	Yes	L
250/70-MC4	No	12/24/36/48	MPPT ctrl & SmartSolar ctrl	Built-in	VE.Direct	Yes	Yes	L
250/85-Tr	No	12/24/36/48	MPPT ctrl & SmartSolar ctrl	Built-in	VE.Direct	Yes	Yes	XL
250/85-MC4	No	12/24/36/48	MPPT ctrl & SmartSolar ctrl	Built-in	VE.Direct	Yes	Yes	XL
250/100-Tr	No	12/24/36/48	MPPT ctrl & SmartSolar ctrl	Built-in	VE.Direct	Yes	Yes	XL
250/100-MC4	No	12/24/36/48	MPPT ctrl & SmartSolar ctrl	Built-in	VE.Direct	Yes	Yes	XL

Color Control GX

Venus GX

Octo GX

Smart Battery Sense

VE.Direct Bluetooth Smart Dongle

VE.Direct to USB interface

SmartSolar Charge Controller
MPPT 75/15

Bluetooth sensing
Smart Battery Sense

Bluetooth sensing
BMV-712 Smart Battery Monitor

Bluetooth Smart built-in
The wireless solution to set-up, monitor, update and synchronise SmartSolar Charge Controllers.

VE.Direct
For a wired data connection to a Color Control GX, other GX products, PC or other devices

Ultra-fast Maximum Power Point Tracking (MPPT)
Especially in case of a clouded sky, when light intensity is changing continuously, an ultra-fast MPPT controller will improve energy harvest by up to 30% compared to PWM charge controllers and by up to 10% compared to slower MPPT controllers.

Load output
Over-discharge of the battery can be prevented by connecting all loads to the load output. The load output will disconnect the load when the battery has been discharged to a pre-set voltage (48V model: interface with a relay).
Alternatively, an intelligent battery management algorithm can be chosen: see Battery Life.
The load output is short circuit proof.

Battery Life: intelligent battery management
When a solar charge controller is not able to recharge the battery to its full capacity within one day, the result is often that the battery will continually be cycled between a 'partially charged' state and the 'end of discharge' state. This mode of operation (no regular full recharge) will destroy a lead-acid battery within weeks or months.
The Battery Life algorithm will monitor the state of charge of the battery and, if needed, day by day slightly increase the load disconnect level (i.e. disconnect the load earlier) until the harvested solar energy is sufficient to recharge the battery to nearly the full 100%. From that point onwards, the load disconnect level will be modulated so that a nearly 100% recharge is achieved about once every week.

Programmable battery charge algorithm
See the software section on our website for details

Day/night timing and light dimming option
See the software section on our website for details

Internal temperature sensor
Compensates absorption and float charge voltage for temperature.

Optional external battery voltage and temperature sensing via Bluetooth
A Smart Battery Sense or a BMV-712 Smart Battery Monitor can be used to communicate battery voltage and temperature to one or more SmartSolar Charge Controllers.

SmartSolar Charge Controller	MPPT 75/10	MPPT 75/15	MPPT 100/15	MPPT 100/20	MPPT100/20-48V
Battery voltage (auto select)	12/24V				12/24/48V
Rated charge current	10A	15A	15A	20A	20A
Nominal PV power, 12V 1a,b)	145W	220W	220W	290W	290W
Nominal PV power, 24V 1a,b)	290W	440W	440W	580W	580W
Nominal PV power, 48V 1a,b)	n. a.	n. a.	n. a.	n. a.	1160W
Max. PV short circuit current 2)	13A	15A	15A	20A	20A
Automatic load disconnect	Yes				
Max. PV open circuit voltage	75V		100V		
Peak efficiency	98%				
Self-consumption	12V: 25 mA 24V: 15 mA				25 / 15 / 10 mA
Charge voltage 'absorption'	14,4V / 28,8V (adjustable)				14,4V / 28,8V / 57,6V (adj.)
Charge voltage 'float'	13,8V / 27,6V (adjustable)				13,8V / 27,6V / 55,2V (adj.)
Charge algorithm	multi-stage adaptive				
Temperature compensation	-16 mV / °C resp. -32 mV / °C				
Max. continuous load current	15A			20A	20A / 20A / 1A
Low voltage load disconnect	11,1V / 22,2V / 44,4V or 11,8V / 23,6V / 47,2V or Battery Life algorithm				
Low voltage load reconnect	13,1V / 26,2V / 52,4V or 14V / 28V / 56V or Battery Life algorithm				
Protection	Output short circuit / Over temperature				
Operating temperature	-30 to +60°C (full rated output up to 40°C)				
Humidity	95%, non-condensing				
Data communication port	VE.Direct (see the data communication white paper on our website)				
ENCLOSURE					
Colour	Blue (RAL 5012)				
Power terminals	6 mm² / AWG10				
Protection category	IP43 (electronic components), IP22 (connection area)				
Weight	0,5 kg		0,6 kg	0,65 kg	
Dimensions (h x w x d)	100 x 113 x 40 mm		100 x 113 x 50 mm	100 x 113 x 60 mm	
STANDARDS					
Safety	EN/IEC 62109-1, UL 1741, CSA C22.2				

1a) If more PV power is connected, the controller will limit input power.
1b) The PV voltage must exceed Vbat + 5V for the controller to start.
Thereafter the minimum PV voltage is Vbat + 1V
2) A PV array with a higher short circuit current may damage the controller.

SmartSolar charge controller MPPT 100/30 & 100/50

SmartSolar Charge Controller MPPT 100/50

Bluetooth sensing Smart Battery Sense

Bluetooth sensing BMV-712 Smart Battery Monitor

Bluetooth Smart built-in
The wireless solution to set-up, monitor, update and synchronise SmartSolar Charge Controllers.

VE.Direct
For a wired data connection to a Color Control GX, other GX products, PC or other devices

Ultrafast Maximum Power Point Tracking (MPPT)
Especially in case of a clouded sky, when light intensity is changing continuously, an ultra-fast MPPT controller will improve energy harvest by up to 30% compared to PWM charge controllers and by up to 10% compared to slower MPPT controllers.

Advanced Maximum Power Point Detection in case of partial shading conditions
If partial shading occurs, two or more maximum power points may be present on the power-voltage curve.
Conventional MPPTs tend to lock to a local MPP, which may not be the optimum MPP.
The innovative BlueSolar algorithm will always maximize energy harvest by locking to the optimum MPP.

Outstanding conversion efficiency
No cooling fan. Maximum efficiency exceeds 98%.
The full output current up to 40°C (104°F).

Flexible charge algorithm
Fully programmable charge algorithm (see the software page on our website), and eight pre-programmed algorithms, selectable with a rotary switch (see manual for details).

Extensive electronic protection
Over-temperature protection and power derating when temperature is high.
PV short circuit and PV reverse polarity protection.
PV reverse current protection.

Internal temperature sensor
Compensates absorption and float charge voltage for temperature.

Optional external battery voltage and temperature sensing via Bluetooth
A Smart Battery Sense or a BMV-712 Smart Battery Monitor can be used to communicate battery voltage and temperature to one or more SmartSolar Charge Controllers.

SmartSolar Charge Controller	MPPT 100/30	MPPT 100/50
Battery voltage	12/24V Auto Select	
Rated charge current	30A	50A
Nominal PV power, 12V 1a,b)	440W	700W
Nominal PV power, 24V 1a,b)	880W	1400W
Maximum PV open circuit voltage	100V	100V
Max. PV short circuit current 2)	35A	60A
Maximum efficiency	98%	98%
Self-consumption	12V: 30 mA 24V: 20 mA	
Charge voltage 'absorption'	Default setting: 14,4V / 28,8V (adjustable)	
Charge voltage 'float'	Default setting: 13,8V / 27,6V (adjustable)	
Charge algorithm	multi-stage adaptive	
Temperature compensation	-16 mV / °C resp. -32 mV / °C	
Protection	PV reverse polarity Output short circuit Over temperature	
Operating temperature	-30 to +60°C (full rated output up to 40°C)	
Humidity	95%, non-condensing	
Data communication port	VE.Direct See the data communication white paper on our website	
ENCLOSURE		
Colour	Blue (RAL 5012)	
Power terminals	16 mm² / AWG6	
Protection category	IP43 (electronic components), IP22 (connection area)	
Weight	1,3 kg	
Dimensions (h x w x d)	130 x 186 x 70 mm	
STANDARDS		
Safety	EN/IEC 62109-1, UL 1741, CSA C22.2	

1a) If more PV power is connected, the controller will limit input power.
1b) The PV voltage must exceed Vbat + 5V for the controller to start.
Thereafter the minimum PV voltage is Vbat + 1V.
2) A PV array with a higher short circuit current may damage the controller.

SmartSolar Charge Controller
MPPT 150/35

Bluetooth sensing
Smart Battery Sense

Bluetooth sensing
BMV-712 Smart Battery Monitor

Bluetooth Smart built-in
The wireless solution to set-up, monitor, update and synchronise SmartSolar Charge Controllers.

VE.Direct
For a wired data connection to a Color Control GX, other GX products, PC or other devices

Ultrafast Maximum Power Point Tracking (MPPT)
Especially in case of a clouded sky, when light intensity is changing continuously, an ultra-fast MPPT controller will improve energy harvest by up to 30% compared to PWM charge controllers and by up to 10% compared to slower MPPT controllers.

Advanced Maximum Power Point Detection in case of partial shading conditions
If partial shading occurs, two or more maximum power points may be present on the power-voltage curve.
Conventional MPPTs tend to lock to a local MPP, which may not be the optimum MPP.
The innovative BlueSolar algorithm will always maximize energy harvest by locking to the optimum MPP.

Outstanding conversion efficiency
No cooling fan. Maximum efficiency exceeds 98%. Full output current up to 40°C (104°F).

Flexible charge algorithm
Fully programmable charge algorithm (see the software page on our website), and eight preprogrammed algorithms, selectable with a rotary switch (see manual for details).

Extensive electronic protection
- Over-temperature protection and power derating when temperature is high.
- PV short circuit and PV reverse polarity protection.
- PV reverse current protection.

Internal temperature sensor
Compensates absorption and float charge voltage for temperature.

Optional external battery voltage and temperature sensing via Bluetooth
A Smart Battery Sense or a BMV-712 Smart Battery Monitor can be used to communicate battery voltage and temperature to one or more SmartSolar Charge Controllers.

SmartSolar Charge Controller	MPPT 150/35
Battery voltage	12 / 24 / 48V Auto Select (software tool needed to select 36V)
Rated charge current	35A
Nominal PV power 1a, b)	12V: 500W / 24V: 1000W / 36V: 1500W / 48V: 2000W
Max. PV short circuit current 2)	40A
Maximum PV open circuit voltage	150V absolute maximum coldest conditions 145V start-up and operating maximum
Maximum efficiency	98%
Self-consumption	12V: 20mA 24V: 15mA 48V: 10mA
Charge voltage 'absorption'	Default setting: 14,4 / 28,8 / 43,2 / 57,6V (adjustable)
Charge voltage 'float'	Default setting: 13,8 / 27,6 / 41,4 / 55,2V (adjustable)
Charge algorithm	multi-stage adaptive (eight pre-programmed algorithms)
Temperature compensation	-16 mV / -32 mV / -64 mV / °C
Protection	PV reverse polarity Output short circuit Over-temperature
Operating temperature	-30 to +60°C (full rated output up to 40°C)
Humidity	95%, non-condensing
Data communication port	VE.Direct See the data communication white paper on our website
ENCLOSURE	
Colour	Blue (RAL 5012)
Power terminals	16 mm² / AWG6
Protection category	IP43 (electronic components), IP22 (connection area)
Weight	1,25 kg
Dimensions (h x w x d)	130 x 186 x 70 mm
STANDARDS	
Safety	EN/IEC 62109-1, UL 1741, CSA C22.2

1a) If more PV power is connected, the controller will limit input power.
1b) The PV voltage must exceed Vbat + 5V for the controller to start.
Thereafter the minimum PV voltage is Vbat + 1V.
2) A PV array with a higher short circuit current may damage the controller.

SmartSolar Charge Controller
MPPT 150/100-Tr
with optional pluggable display

SmartSolar Charge Controller
MPPT 150/100-MC4
without display

Bluetooth sensing:
Smart Battery Sense

Bluetooth sensing:
BMV-712 Smart Battery Monitor

Bluetooth Smart built-in
The wireless solution to set-up, monitor, update and synchronise SmartSolar Charge Controllers.

Ultra-fast Maximum Power Point Tracking (MPPT)
Especially in case of a clouded sky, when light intensity is changing continuously, an ultra-fast MPPT controller will improve energy harvest by up to 30% compared to PWM charge controllers and by up to 10% compared to slower MPPT controllers.

Advanced Maximum Power Point Detection in case of partial shading conditions
If partial shading occurs, two or more maximum power points (MPP) may be present on the power-voltage curve.
Conventional MPPTs tend to lock to a local MPP, which may not be the optimum MPP.
The innovative SmartSolar algorithm will always maximize energy harvest by locking to the optimum MPP.

Outstanding conversion efficiency
No cooling fan. Maximum efficiency exceeds 98%.

Flexible charge algorithm
Fully programmable charge algorithm (see the software page on our website), and eight pre-programmed algorithms, selectable with a rotary switch (see manual for details).

Extensive electronic protection
Over-temperature protection and power derating when temperature is high.
PV short circuit and PV reverse polarity protection.
PV reverse current protection.

Internal temperature sensor
Compensates absorption and float charge voltage
for temperature.

Optional external battery voltage and temperature sensing via Bluetooth
A Smart Battery Sense or a BMV-712 Smart Battery Monitor can be used to communicate battery voltage and temperature to one or more SmartSolar Charge Controllers.

VE.Direct
For a wired data connection to a Color Control GX, other GX products, PC or other devices

Remote on-off
To connect for example to a VE.BUS BMS.

Programmable relay
Can be programmed to trip on an alarm,
or other events.

Optional: SmartSolar pluggable LCD display
Simply remove the rubber seal that protects
the plug on the front of the controller,
and plug-in the display.

SmartSolar pluggable display

SmartSolar Charge Controller
MPPT 250/100-Tr
with optional pluggable display

SmartSolar Charge Controller
MPPT 250/100-MC4
without display

Bluetooth sensing:
Smart Battery Sense

Bluetooth sensing:
BMV-712 Smart Battery Monitor

Bluetooth Smart built-in
The wireless solution to set-up, monitor, update and synchronise SmartSolar Charge Controllers.

Ultra-fast Maximum Power Point Tracking (MPPT)
Especially in case of a clouded sky, when light intensity is changing continuously, an ultra-fast MPPT controller will improve energy harvest by up to 30% compared to PWM charge controllers and by up to 10% compared to slower MPPT controllers.

Advanced Maximum Power Point Detection in case of partial shading conditions
If partial shading occurs, two or more maximum power points (MPP) may be present on the power-voltage curve.
Conventional MPPTs tend to lock to a local MPP, which may not be the optimum MPP.
The innovative SmartSolar algorithm will always maximize energy harvest by locking to the optimum MPP.

Outstanding conversion efficiency
No cooling fan. Maximum efficiency exceeds 99%.

Flexible charge algorithm
Fully programmable charge algorithm (see the software page on our website), and eight pre-programmed algorithms, selectable with a rotary switch (see manual for details).

Extensive electronic protection
Over-temperature protection and power derating when temperature is high.
PV short circuit and PV reverse polarity protection.
PV reverse current protection.

Internal temperature sensor
Compensates absorption and float charge voltage for temperature.

Optional external battery voltage and temperature sensing via Bluetooth
A Smart Battery Sense or a BMV-712 Smart Battery Monitor can be used to communicate battery voltage and temperature to one or more SmartSolar Charge Controllers.

VE.Direct
For a wired data connection to a Color Control GX, other GX products, PC or other devices

Remote on-off
To connect for example to a VE.BUS BMS.

Programmable relay
Can be programmed (a.o. with a smartphone) to trip on an alarm, or other events.

Optional: SmartSolar pluggable LCD display
Simply remove the rubber seal that protects the plug on the front of the controller, and plug-in the display.

SmartSolar pluggable display

BlueSolar PWM-Light charge controllers 12/24V

BlueSolar PWM-Light 10A

Features

- Load output with low battery voltage disconnect function.
- Lighting control function, one timer only.
- Two digit seven segment display for quick and easy setting of the load output functionality, including timer setting.
- Three stage battery charging (bulk, absorption, float), not programmable.
- Load output protected against over load and short circuit.
- Protected against reverse polarity connection of the solar array and/or battery.

Day/night timing options

See manual for details

BlueSolar PWM-Light	12/24-5	12/24-10	12/24-20	12/24-30
Battery Voltage	12/24 V with automatic system voltage detection			
Rated charge current	5A	10A	20A	30A
Automatic load disconnect	Yes			
Maximum solar voltage	28V / 55V (1)			
Self-consumption	< 10 mA			
Load output	Manual control + low voltage disconnect			
Protection	Battery reverse polarity (fuse) Output short circuit Over temperature			
Overload protection	Shut down after 60 s in case of 130% load			
	Shut down after 5 s in case of 160% load			
	Short circuit: immediate shut down			
Grounding	Common positive			
Operating temp. range	-20 to +50°C (full load)			
Humidity (non-condensing)	Max 95%			
BATTERY				
Charge voltage 'absorption'	14.2V / 28,4V			
Charge voltage 'float'	13.8V / 27,6V			
Low voltage load disconnect	11,2V / 22,4V			
Low voltage load reconnect	12,6V / 25,2V (manual) 13,1V / 26,2V (automatic)			
ENCLOSURE				
Protection class	IP20			
Terminal size	5 mm² / AWG10			
Weight	0,15kg			0,2kg
Dimensions (h x w x d)	70 x 133 x 33,5 mm (2.8 x 5.3 x 1.3 inch)			
STANDARDS				
Safety	IEC 62109-1			
EMC	EN 61000-6-1, EN 61000-6-3, ISO 7637-2			

1) For 12V use 36 cell solar panels
For 24V use 72 cell solar panels
or 2x 36 cell in series

2) The controller switches to the lower float voltage level 2 hours after the absorption voltage has been reached.
Whenever the battery voltage becomes lower than 13V, a new charge cycle is triggered.

BlueSolar PWM-Pro 10A

BlueSolar Pro Remote Panel

Programmable

The BlueSolar PWM-Pro series is ready for use with its default settings.
It also is fully programmable:

- With help of a computer and software (available free of charge from our website)
- With the dedicated BlueSolar Pro Remote Panel (see features below).

Features

- Lighting control function, fully programmable.
- Three stage battery charging (bulk, absorption, float), fully programmable.
- Integrated battery monitor function (Remote Panel needed to display state of charge).
- Load output with low voltage disconnect and manual control (default setting).
- Optional external temperature sensor.
- Load output protected against over load and short circuit.
- Protected against reverse polarity connection of the solar array and/or battery.

Day/night timing options

See Remote Panel manual for details

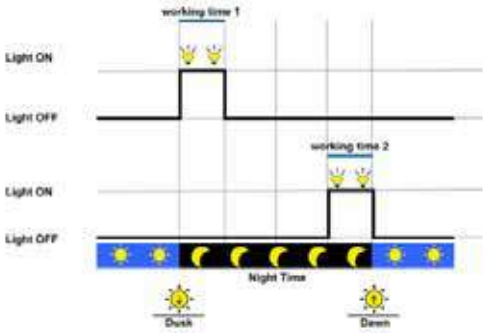

BlueSolar PWM-Pro	12/24-5	12/24-10	12/24-20	12/24-30
Battery Voltage	12/24V with automatic system voltage detection			
Rated charge current	5A	10A	20A	30A
Automatic load disconnect	Yes			
Maximum solar voltage	28V / 55V (1)			
Self-consumption	< 10mA			
Load output	Manual control + low voltage disconnect			
Protection	Battery reverse polarity (fuse) Output short circuit Over temperature			
Battery temperature sensor	Optional (article SCC940100100)			
Temperature compensation	-30 mV / °C resp. -60 mV / °C (if temperature sensor installed)			
Remote panel	Optional (article SCC900300000)			
Grounding	Common positive			
Operating temp. range	-20 to +50°C			
Humidity (non-condensing)	Max 98%			
DEFAULT SETTINGS				
Absorption charge (2)	14.4V / 28,8V			
Float charge (2)	13.8V / 27,6V			
Equalization charge (2)	14,6V / 29,2V			
Low voltage load disconnect	11,1V / 22,2V			
Low voltage load reconnect	12,6V / 25,2V			
ENCLOSURE				
Terminal size	4mm²	4mm²	10mm²	10mm²
Protection category	IP30			
Weight	0,13kg	0,13kg	0,3kg	0,5kg
Dimensions (h x w x d)	138x70x37 mm 5.4x2.7x1.4 inch	138x70x37 mm 5.4x2.7x1.4 inch	160x82x48 mm 6.3x3.2x1.9 inch	200x100x57 mm 7.9x4.0x2.3 inch
STANDARDS				
Safety	IEC 62109-1			
Emission	EN 61000-6-1, EN 61000-6-3, ISO 7637-2			

1) For 12V use 36 cell Solar panels
For 24V use 72 cell Solar panels

The problem: the service life of an expensive battery bank can be substantially shortened due to state of charge unbalance

One battery with a slightly higher internal leakage current in a 24V or 48V bank of several series/parallel connected batteries will cause undercharge of that battery and parallel connected batteries, and overcharge of the series connected batteries. Moreover, when new cells or batteries are connected in series, they should all have the same initial state of charge. Small differences will be ironed out during absorption or equalize charging, but large differences will result in damage due to excessive gassing (caused by overcharging) of the batteries with the higher initial state of charge and sulphation (caused by undercharging) of the batteries with the lower initial state of charge.

The Solution: battery balancing

The Battery Balancer equalizes the state of charge of two series connected 12V batteries, or of several parallel strings of series connected batteries.
When the charge voltage of a 24V battery system increases to more than 27,3V, the Battery Balancer will turn on and compare the voltage over the two series connected batteries. The Battery Balancer will draw a current of up to 0,7A from the battery (or parallel connected batteries) with the highest voltage. The resulting charge current differential will ensure that all batteries will converge to the same state of charge.

If needed, several balancers can be paralleled.
A 48V battery bank can be balanced with three Battery Balancers.

LED indicators

Green: on (battery voltage > 27,3V)
Orange: lower battery leg active (deviation > 0,1V)
Orange: upper battery leg active (deviation > 0,1V)
Red: alarm (deviation > 0,2V). Remains on until the deviation has reduced to less than 0,14V, or until system voltage drops to less than 26,6V.

Alarm relay

Normally open. The alarm relay closes when the red LED switches on and opens when the red LED switches off.

Alarm reset

Two terminals are available to connect a push button. Interconnecting the two terminals resets the relay.
The reset condition will remain active until the alarm is over. Thereafter the relay will close again when a new alarm occurs.

Even more insight and control with the midpoint monitoring function of the BMV-702 Battery Monitor

The BMV-702 measures the midpoint of a string of cells or batteries. It displays the deviation from the ideal midpoint in volts or percent. Separate deviation percentages can be set to trigger a visual/audible alarm and to close a potential free relay contact for remote alarm purposes.
Please see the manual of the BMV-702 for more information about battery balancing.

Learn more about batteries and battery charging

To learn more about batteries and charging batteries, please refer to our book 'Energy Unlimited' (available free of charge from Victron Energy and downloadable from www.victronenergy.com).

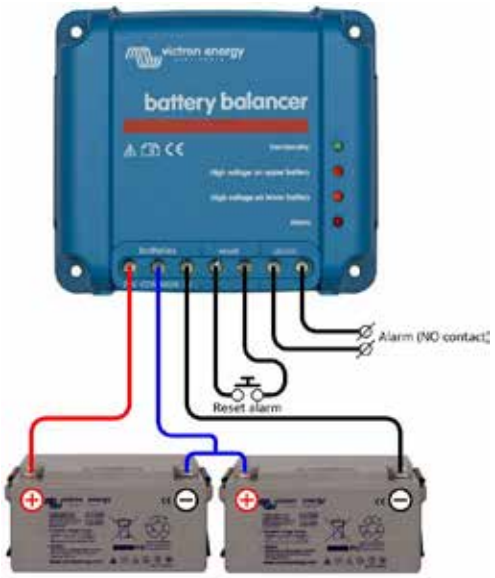

Battery Balancer connected to two series connected 12V batteries (24V system)

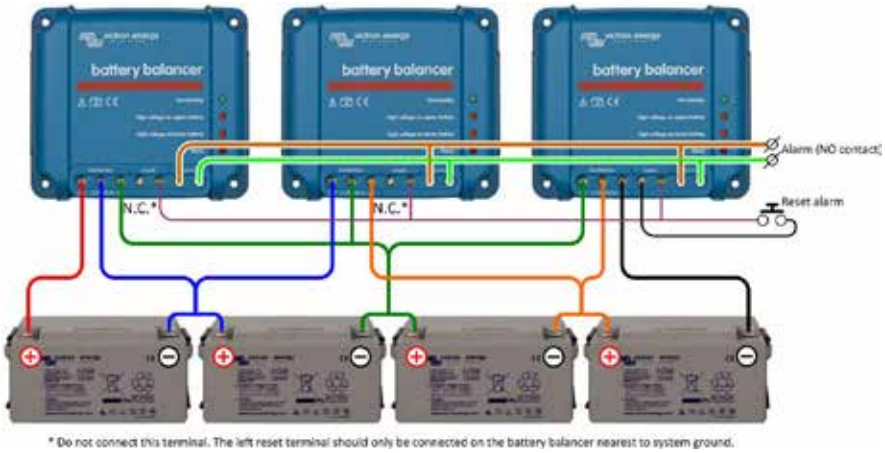

Three Battery Balancers connected to four series connected 12V batteries (48V system)

Victron Battery Balancer	
Input voltage range	Up to 18V per battery, 36V total
Turn on level	27,3V +/- 1%
Turn off level	26,6V +/- 1%
Current draw when off	0,7 mA
Midpoint deviation to start balancing	50 mV
Maximum balancing current	0,7A (when deviation > 100 mV)
Alarm trigger level	200 mV
Alarm reset level	140 mV
Alarm relay	60V / 1A normally open
Alarm relay reset	Two terminals to connect a push button
Over temperature protection	yes
Operating temperature	-30 to +50°C
Humidity (non-condensing)	95%
ENCLOSURE	
Colour	Blue (RAL 5012)
Connection terminals	Screw terminals 6 mm² / AWG10
Protection category	IP22
Weight	0,4 kg
Dimensions (h x w x d)	100 x 113 x 47 mm
STANDARDS	
Safety	EN 60950, CSA/UL 62368-1
Emission	EN 61000-6-3, EN 55014-1
Immunity	EN 61000-6-2, EN 61000-6-1, EN 55014-2
Automotive Directive	EN 50498

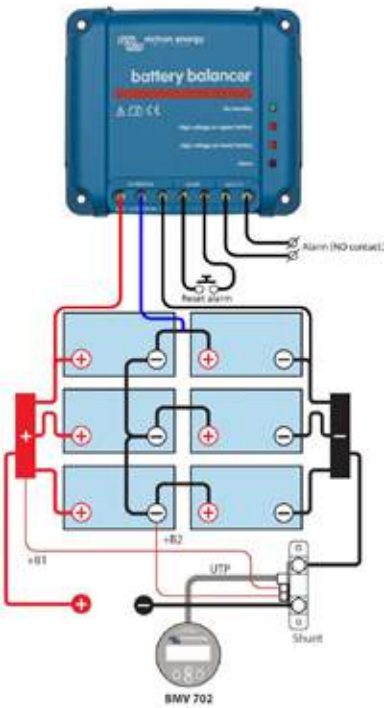

Battery Balancer connected to six series-parallel connected 12V batteries (24V system)

Installation

1) The Battery Balancer(s) must be installed on a well-ventilated vertical surface close to the batteries (but, due to possible corrosive gasses, not above the batteries!)
2) **In case of series-parallel connection, the midpoint interconnecting cables must be sized to at least carry the current that arises when one battery becomes open-circuited.**
   - In case of 2 parallel strings: cross section 50% of the series interconnecting cables.
   - In case of 3 parallel strings: cross section 33% of the series interconnecting cables, etc.
3) If required: first wire the alarm contact and the alarm reset.
4) Use at least 0,75 mm² to wire the negative, positive and midpoint connections (in this order). Additionally, if in your application it is needed to comply with UL, also fuse these wires near the batteries with a 10A fuse suitable for DC current (e.g. Littelfuse ATOF series automotive blade fuse in combination with an inline fuse holder).
5) The balancer is operational.
   When the voltage over a string of two batteries is less than 26,6V the balancer switches to standby and all LEDs will be off.
   When the voltage over a string of two batteries increases to more than 27,3V (during charging) the green LED will turn on, indicating that the balancer is on.
   When on, a voltage deviation of more than 50 mV will start the balancing process and at 100 mV one of the two orange LEDs will turn on. A deviation of more than 200 mV will trigger the alarm relay.

What to do in case of an alarm during charging

In case of a new battery bank the alarm is probably due to differences in initial state-of-charge. If the difference between the lowest and highest battery voltage reading is more than 0,9V: stop charging and charge the individual batteries or cells separately first, or reduce charge current substantially and allow the batteries to equalize over time.

If the problem persists after several charge-discharge cycles:

a) In case of series-parallel connection disconnect the midpoint parallel connection wiring and measure the individual midpoint voltages during absorption charge to isolate batteries or cells which need additional charging, or:
b) Charge and then test all batteries or cells individually or:
c) Connect two or more battery balancers in parallel (on average one balancer will take care of up to three parallel 200 Ah strings).

In case of an older battery bank which has performed well in the past, the problem may be due to:

d) Systematic undercharge: more frequent charging needed (VRLA batteries), or equalization charge needed (flooded deep cycle flat plate or OPzS batteries). Better and regular charging will solve the problem.
e) One or more faulty cells: replace all batteries.

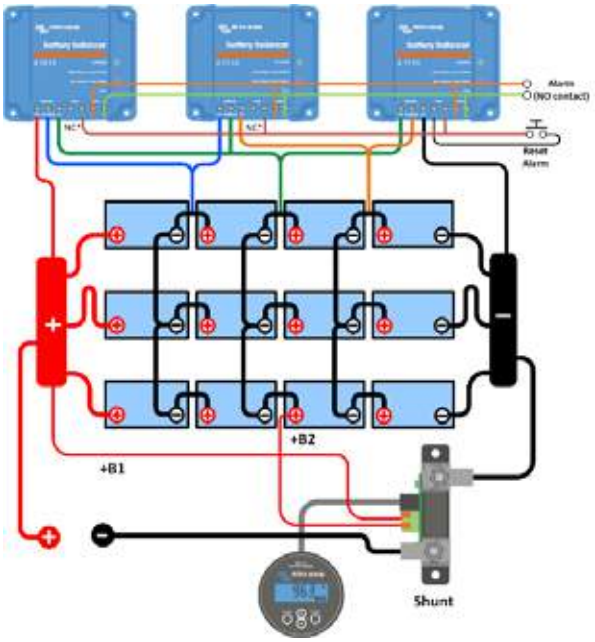

Three Battery Balancers connected to 12 series-parallel connected 12V batteries (48V system)

Telecom batteries

Telecom Battery
Battery AGM 12V 200Ah

Designed for telecom applications; excellent 'floor space savers' for marine and vehicle applications

The deep cycle AGM telecom series has been designed for use in telecom systems. With front access terminals and small footprint, the batteries are ideal for racked systems. Similarly, these batteries can help solve limited floor space and access problems on board boats and vehicles.

AGM technology

AGM stands for Absorbent Glass Mat. In these batteries the electrolyte is absorbed into a glass-fibre mat between the plates by capillary action.

Low self-discharge

Because of the use of lead calcium grids and high purity materials, Victron VRLA batteries can be stored during long periods of time without recharge. The rate of self-discharge is less than 2% per month at 20°C. The self-discharge doubles for every increase in temperature by 10°C.

Low internal resistance

Accepts very high charge and discharge rates.

High cyclic life capability

More than 500 cycles at 50% depth of discharge.

Telecom Battery
Battery AGM 12V 200Ah

Learn more about batteries and battery charging

To learn more about batteries and charging batteries, please refer to our book 'Energy Unlimited' (available free of charge from Victron Energy and downloadable from www.victronenergy.com).

12V AGM Telecom battery	115Ah	165Ah	200Ah
Capacity 1 / 3 / 5 / 10 / 20 hours (% of nominal)	60 / 75 / 82 / 91 / 100 (@ 70°F/25°C, end of discharge 10,5V)		
Capacity 10 / 20 / 30 / 40 minutes (% of nominal)	33 / 44 / 53 / 57 (@ 70°F/25°C, end of discharge 9,6V)		
Nominal capacity (77°F/25°C, 10,5V)	115Ah	165Ah	200Ah
Cold Cranking Amps @ 0°F/-18°C	1000	1500	1800
DIN cold start current (A) @ 0°F/-18°C	600	900	1000
Short Circuit Current (A)	3500	5000	6000
Reserve Capacity (minutes)	200	320	400
Shelf life @ 70°F/20°C	1 year		
Absorption voltage (V) @ 70°F/20°C	14,4 – 14,7		
Float voltage (V) @ 70°F/20°C	13,6 – 13,8		
Storage voltage (V) @ 70°F/20°C	13,2		
Float design life @ 70°F/20°C	12 years		
Cycle design life @ 80% discharge	500		
Cycle design life @ 50% discharge	750		
Cycle design life @ 30% discharge	1800		
Dimensions (lxwxh, mm)	395 x 110 x 293mm	548 x 105 x 316mm	546 x 125 x 323mm
Dimensions (lxwxh, inches)	15.37 x 4.33 x 11.53	21.57 x 4.13 x 12.44	21.49 x 4.92 x 12.71
Weight (kg/pounds)	35kg/77lbs	49kg/88lbs	60kg/132lbs

OPzS Solar Batteries 910

Long life flooded tubular plate batteries

Design life: >20 years at 20ºC, >10 years at 30ºC, >5 years at 40ºC.
Cycling expectancy of up to 1500 cycles at 80% depth of discharge.
Manufactured according to DIN 40736, EN 60896 and IEC 61427.

Low maintenance

Under normal operating conditions and 20ºC, distilled water has to be added every 2 - 3 years.

Dry-charged or ready for use electrolyte filled

The batteries are available filled with electrolyte or dry-charged (for long term stocking, container transport or air transport). Dry charged batteries have to be filled with diluted sulfuric acid (density 1,24kg/l @ 20ºC).
The electrolyte may be stronger for cold- or weaker for hot climates.

Learn more about batteries and battery charging

To learn more about batteries and charging batteries, please refer to our book 'Energy Unlimited' (available free of charge from Victron Energy and downloadable from www.victronenergy.com).

OPzS Solar type	OPzS Solar 910	OPzS Solar 1210	OPzS Solar 1520	OPzS Solar 1830	OPzS Solar 2280	OPzS Solar 3040	OPzS Solar 3800	OPzS Solar 4560
Nominal capacity (120hr / 20ºC)	910Ah	1210Ah	1520Ah	1830Ah	2280Ah	3040Ah	3800Ah	4560Ah
Capacity (10 hr / 20ºC)	640Ah	853Ah	1065Ah	1278Ah	1613Ah	2143Ah	2675Ah	3208Ah
Capacity 2 / 5 / 10 hours (% of 10hr capacity)	60 / 85 / 100 (@ 68ºF/20ºC, end of discharge 1,8 Volt per cell)							
Capacity 20 / 24 / 48 / 72 hours (% of 120hr capacity)	77 / 80 / 89 / 95 (@ 68ºF/20ºC, end of discharge 1,85 Volt per cell)							
Capacity 100 / 120 / 240 hours (% of 120hr capacity)	99 / 100 / 104 (@ 68ºF/20ºC, end of discharge 1,85 Volt per cell)							
Self-discharge @ 70ºF/20ºC	3% per month							
Absorption voltage (V) @ 70ºF/20ºC	2,35 to 2,50V/cell (28,2 to 30,0V for a 24 Volt battery)							
Float voltage (V) @ 70ºF/20ºC	2,23 to 2,30V/cell (26,8 to 27,6V for a 24 Volt battery)							
Storage voltage (V) @ 70ºF/20ºC	2,18 to 2,22V/cell (26,2 to 26,6V for a 24 Volt battery)							
Float design life @ 70ºF/20ºC	20 years							
Cycle design life @ 80% discharge	1500							
Cycle design life @ 50% discharge	2800							
Cycle design life @ 30% discharge	5200							
Dimensions (lxwxh, mm)	145 x 206 x 711	210 x 191 x 711	210 x 233 x 711	210 x 275 x 711	210 x 275 x 861	212 x 397 x 837	212 x 487 x 837	212 x 576 x 837
Dimensions (lxwxh, inches)	5,7 x 8,1 x 28	8,3 x 7,5 x 28	8,3 x 9,2 x 28	8,3 x 10,8 x 28	8,3 x 10,8 x 33,9	8,4 x15,6 x 32,9	8,4 x 19,2 x 32,9	8,4 x 22,7 x 32,9
Weight without acid (kg / pounds)	35 / 77	46 / 101	57 / 126	66 / 146	88 / 194	115 / 254	145 / 320	170 / 375
Weight with acid (kg / pounds)	50 / 110	65 / 143	80 / 177	93 / 205	119 / 262	160 / 253	200 / 441	240 / 530

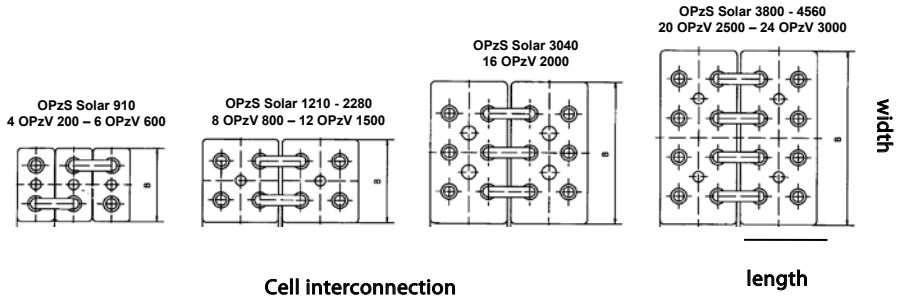

A new AGM battery: the AGM Super Cycle battery

A truly innovative battery

The AGM Super Cycle batteries are the result of recent battery electrochemistry developments.
The paste of the positive plates is less sensitive to softening, even in case of repeated 100% discharge of the battery, and new additives to the electrolyte reduce sulfation in case of deep discharge.

Exceptional 100% depth of discharge (DoD) performance

Tests have shown that the Super Cycle battery does withstand at least three hundred 100% DoD cycles.
The tests consist of a daily discharge to 10,8V with $I = 0,2C_{20}$, followed by approximately two hours rest in discharged condition, and then a recharge with $I = 0,2C_{20}$.
The two hours rest period in discharged condition will damage most batteries within 100 cycles, but not the Super Cycle battery.

We recommend the Super Cycle battery for applications where an occasional discharge to 100% DoD, or frequent discharge to 60-80% DoD is expected.

Smaller and lighter

An additional advantage of the new chemistry is a slightly smaller size and less weight compared to our standard deep cycle AGM batteries.

Low internal resistance

The internal resistance is also slightly lower compared to our standard deep cycle AGM batteries.

Recommended charge voltage:

	Float Service	Cycle service Normal	Cycle service Fast recharge
Absorption		14,2 - 14,6 V	14,6 - 14,9 V
Float	13,5 - 13,8 V	13,5 - 13,8 V	13,5 - 13,8 V
Storage	13,2 - 13,5 V	13,2 - 13,5 V	13,2 - 13,5 V

Specifications

Article number	V	Ah C5 (10,8V)	Ah C10 (10,8V)	Ah C20 (10,8V)	l x w x h mm	Weight kg	CCA @0°F	RES CAP @80°F	Terminals
BAT412015080	12	13	14	15	151 x 100 x 103	4,1			Faston
BAT412025081	12	22	24	25	181 x 77 x 175	6,5			M5 insert
BAT412038081	12	34	36	38	267 x 77 x 175	9,5			M5 insert
BAT412060081	12	52	56	60	224 x 135 x 178	14	300	90	M5 insert
BAT412110081	12	82	90	100	260 x 168 x 215	26	500	170	M6 insert
BAT412112081	12	105	114	125	330 x 171 x 214	33	550	220	M8 insert
BAT412117081	12	145	153	170	336 x 172 x 280	45	600	290	M8 insert
BAT412123081	12	200	210	230	532 x 207 x 226	57	700	400	M8 insert

Cycle life

≥ 300 cycles @ 100% DoD (discharge to 10,8V with $I = 0,2C_{20}$, followed by approximately two hours rest in discharged condition, and then a recharge with $I = 0,2C_{20}$)
≥ 700 cycles @ 60% DoD (discharge during three hours with $I = 0,2C_{20}$, immediately followed by recharge at $I = 0,2C_{20}$)
≥ 1000 cycles @ 40% DoD (discharge during two hours with $I = 0,2C_{20}$, immediately followed by recharge at $I = 0,2C_{20}$)

Super Cycle Battery 12V 230Ah

AGM Battery
12V 90Ah

GEL OPzV 2V cell

1. VRLA technology
VRLA stands for Valve Regulated Lead Acid, which means that the batteries are sealed. Gas will escape through the safety valves only in case of overcharging or cell failure.
VRLA batteries are maintenance free for life.

2. Sealed (VRLA) AGM Batteries
AGM stands for Absorbent Glass Mat. In these batteries the electrolyte is absorbed into a glass-fibre mat between the plates by capillary action. As explained in our book 'Energy Unlimited', AGM batteries are more suitable for short-time delivery of high currents than gel batteries.

3. Sealed (VRLA) Gel Batteries
Here the electrolyte is immobilized as gel. Gel batteries in general have a longer service life and better cycle capacity than AGM batteries.

4. Low Self-Discharge
Because of the use of lead calcium grids and high purity materials, Victron VRLA batteries can be stored during long periods of time without recharge. The rate of self-discharge is less than 2% per month at 20°C. The self-discharge doubles for every increase in temperature by 10°C.
Victron VRLA batteries can therefore be stored for up to a year without recharging, if kept under cool conditions.

5. Exceptional Deep Discharge Recovery
Victron VRLA batteries have exceptional discharge recovery, even after deep or prolonged discharge.
Nevertheless repeatedly deep and prolonged discharge has a very negative effect on the service life of all lead acid batteries, Victron batteries are no exception.

6. Battery Discharging Characteristics
The rated capacity of Victron AGM and Gel Deep Cycle batteries refers to 20 hour discharge, in other words: a discharge current of 0,05 C.
The rated capacity of Victron Tubular Plate Long Life batteries refers to 10 hours discharge.
The effective capacity decreases with increasing discharge current (see table 1). Please note that the capacity reduction will be even faster in case of a constant power load, such as an inverter.

Discharg time (constant current)	End Voltage V	AGM 'Deep Cycle' %	Gel 'Deep Cycle' %	Gel 'Long Life' %
20 hours	10,8	100	100	112
10 hours	10,8	92	87	100
5 hours	10,8	85	80	94
3 hours	10,8	78	73	79
1 hour	9,6	65	61	63
30 min.	9,6	55	51	45
15 min.	9,6	42	38	29
10 min.	9,6	38	34	21
5 min.	9,6	27	24	
5 seconds		8 C	7 C	

Table 1: Effective capacity as a function of discharge time
(the lowest row gives the maximum allowable 5 seconds discharge current)

Our AGM deep cycle batteries have excellent high current performance and are therefore recommended for high current applications such as engine starting. Due to their construction, Gel batteries have a lower effective capacity at high discharge currents. On the other hand, Gel batteries have a longer service life, both under float and cycling conditions.

7. Effect of temperature on service life
High temperature has a very negative effect on service life. The service life of Victron batteries as a function of temperature is shown in table 2.

Average Temperature	AGM 'Deep Cycle' years	Gel 'Deep Cycle' years	Gel 'Long Life' years
20°C / 68°F	7 - 10	12	20
30°C / 86°F	4	6	10
40°C / 104°F	2	3	5

Table 2: Design service life of Victron batteries under float service

8. Effect of temperature on capacity

As is shown by the graph below, capacity reduces sharply at low temperatures.

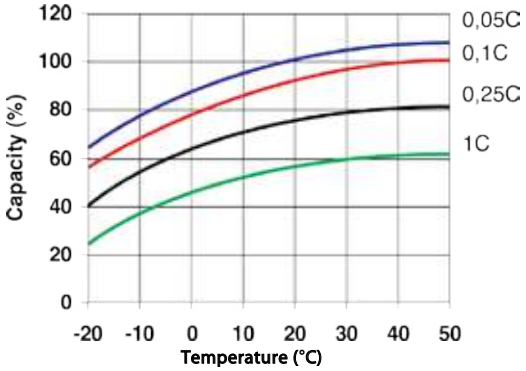

Fig. 1: Effect of temperature on capacity

9. Cycle life of Victron batteries

Batteries age due to discharging and recharging. The number of cycles depends on the depth of discharge, as is shown in figure 2.

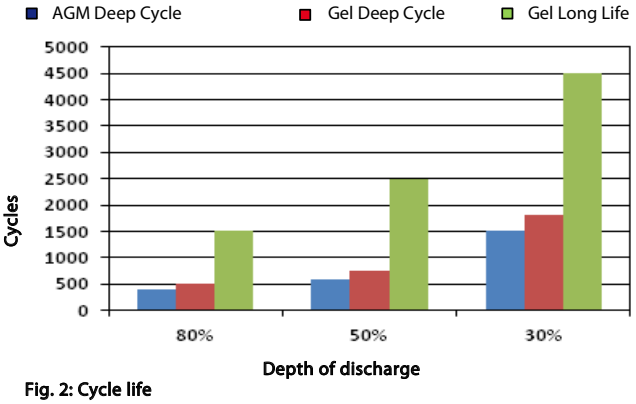

Fig. 2: Cycle life

10. Battery charging in case of cycle use: the 3-step charge curve

The most common charge curve used to charge VRLA batteries in case of cyclic use is the 3-step charge curve, whereby a constant current phase (the bulk phase) is followed by two constant voltage phases (absorption and float), see fig. 3.

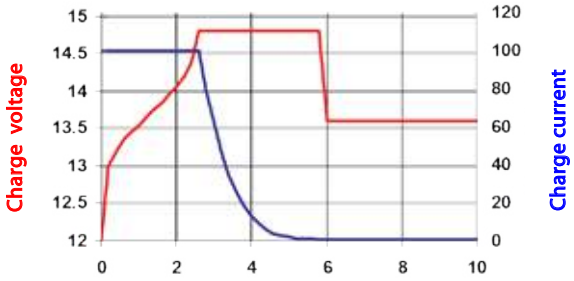

Fig. 3: Three step charge curve

During the absorption phase the charge voltage is kept at a relatively high level in order to fully recharge the battery within reasonable time. The third and last phase is the float phase: the voltage is lowered to standby level, sufficient to compensate for self-discharge.

Disadvantages of the traditional 3-step charge curve:

- During the bulk phase the current is kept at a constant and often high level, even after the gassing voltage (14,34V for a 12V battery) has been exceeded. This can lead to excessive gas pressure in the battery. Some gas will escape through the safety valves, reducing service life.
- Thereafter the absorption voltage is applied during a fixed period of time, irrespective of how deep the battery has been discharged previously. A full absorption period after a shallow discharge will overcharge the battery, again reducing service life (a.o. due to accelerated corrosion of the positive plates).
- Research has shown that battery life can be increased by decreasing float voltage to an even lower level when the battery is not in use.

11. Battery charging: longer battery life with Victron 4-step adaptive charging

Victron developed the adaptive charge curve. The 4-step adaptive chare curve is the result of years of research and testing.

The Victron four-step adaptive charge curve solves the 3 main problems of the 3-step curve:

- Battery Safe Mode
  In order to prevent excessive gassing, Victron has invented the 'Battery Safe Mode'. The Battery Safe Mode will limit the rate of voltage increase once the gassing voltage has been reached. Research has shown that this will reduce internal gassing to a safe level.
- Variable absorption time
  Based on the duration of the bulk stage, the charger calculates how long the absorption time should be in order to fully charge the battery. If the bulk time is short, this means the battery was already charged and the resulting absorption time will also be short, whereas a longer bulk time will also result in a longer absorption time.
- Storage mode
  After completion of the absorption period the battery should be fully charged, and the voltage is lowered to the float or standby level. If no discharge occurs during the next 24 hours, the voltage is reduced even further and the battery goes into storage mode. The lower storage voltage reduces corrosion of the positive plates.
  Once every week the charge voltage is increased to the absorption level for a short period to compensate for self-discharge (Battery Refresh mode).

12. Battery charging in case of standby use: constant voltage float charging

When a battery is not frequently deeply discharged, a 2-step charge curve can be used. During the first phase the battery is charged with a limited current (the bulk phase). Once a pre-set voltage has been reached the battery is kept at that voltage (the float phase).
This charge method is used for starter batteries in vehicles and in uninterruptible power supplies (UPS).

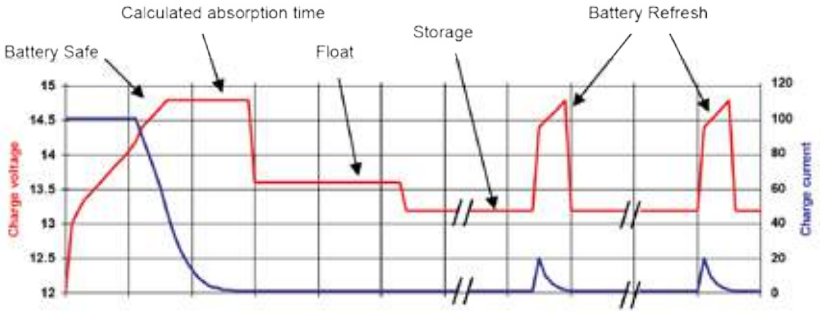

Fig. 4: Four-step adaptive charge curve

13. Optimum charge voltage of Victron VRLA batteries

The recommended charge voltage settings for a 12V battery are shown in table 3.

14. Effect of temperature on charging voltage

The charge voltage should be reduced with increased temperature. Temperature compensation is required when the temperature of the battery is expected to be less than 10°C / 50°F or more than 30°C / 85°F during long periods of time.
The recommended temperature compensation for Victron VRLA batteries is -4 mV / Cell (-24 mV /°C for a 12V battery).
The centre point for temperature compensation is 25°C / 70°F.

15. Charge current

The charge current should preferably not exceed 0,2C (20A for a 100Ah battery).The temperature of a battery will increase by more than 10°C if the charge current exceeds 0,2C. Therefore temperature compensation is required if the charge current exceeds 0,2C.

	Float Service (V)	Cycle service Normal (V)	Cycle service Fastest recharge (V)
Victron AGM 'Deep Cycle'			
Absorption		14,2 - 14,6	14,6 - 14,9
Float	13,5 - 13,8	13,5 - 13,8	13,5 - 13,8
Storage	13,2 - 13,5	13,2 - 13,5	13,2 - 13,5
Victron Gel 'Deep Cycle'			
Absorption		14,1 - 14,4	
Float	13,5 - 13,8	13,5 - 13,8	
Storage	13,2 - 13,5	13,2 - 13,5	
Victron Gel 'Long Life'			
Absorption		14,0 - 14,2	
Float	13,5 - 13,8	13,5 - 13,8	
Storage	13,2 - 13,5	13,2 - 13,5	

Table 3: Recommended charge voltage

12 Volt Deep Cycle AGM							General Specification
Article number	Ah	V	l x w x h mm	Weight kg	CCA @0°F	RES CAP @80°F	Technology: flat plate AGM Terminals: copper
BAT406225084	240	6	320 x 176 x 247	31	700	270	Rated capacity: 20 hr. discharge at 25°C Float design life: 7-10 years at 20°C Cycle design life: 400 cycles at 80% discharge 600 cycles at 50% discharge 1500 cycles at 30% discharge
BAT212070084	8	12	151 x 65 x 101	2,5			
BAT212120084	14	12	151 x 98 x 101	4,1			
BAT212200084	22	12	181 x 77 x 167	5,8			
BAT412350084	38	12	197 x 165 x 170	12,5			
BAT412550084	60	12	229 x 138 x 227	20	280	80	
BAT412600084	66	12	258 x 166 x 235	24	300	90	
BAT412800084	90	12	350 x 167 x 183	27	400	130	
BAT412101084	110	12	330 x 171 x 220	32	500	170	
BAT412121084	130	12	410 x 176 x 227	38	550	200	
BAT412151084	165	12	485 x 172 x 240	47	600	220	
BAT412201084	220	12	522 x 238 x 240	65	650	250	
BAT412124081	240	12	522 x 240 x 224	67	650	250	

12 Volt Deep Cycle GEL							General Specification
Article number	Ah	V	l x w x h mm	Weight kg	CCA @0°F	RES CAP @80°F	Technology: flat plate GEL Terminals: copper
BAT412550104	60	12	229 x 138 x 227	20	250	70	Rated capacity: 20 hr. discharge at 25°C Float design life: 12 years at 20°C Cycle design life: 500 cycles at 80% discharge 750 cycles at 50% discharge 1800 cycles at 30% discharge
BAT412600100	66	12	258 x 166 x 235	24	270	80	
BAT412800104	90	12	350 x 167 x 183	26	360	120	
BAT412101104	110	12	330 x 171 x 220	33	450	150	
BAT412121104	130	12	410 x 176 x 227	38	500	180	
BAT412151104	165	12	485 x 172 x 240	48	550	200	
BAT412201104	220	12	522 x 238 x 240	66	600	220	
BAT412126101	265	12	520 x 268 x 223	75	650	250	

2 Volt Long Life GEL					General Specification
Article number	Ah	V	l x b x h mm	Weight kg	Technology: tubular plate GEL Terminals: copper
BAT702601260	600	2	145 x 206 x 688	49	Rated capacity: 10 hr. discharge at 25°C Float design life: 20 years at 20°C Cycle design life: 1500 cycles at 80% discharge 2500 cycles at 50% discharge 4500 cycles at 30% discharge
BAT702801260	800	2	210 x 191 x 688	65	
BAT702102260	1000	2	210 x 233 x 690	80	
BAT702122260	1200	2	210 x 275 x 690	93	
BAT702152260	1500	2	210 x 275 x 840	115	
BAT702202260	2000	2	215 x 400 x 815	155	
BAT702252260	2500	2	215 x 490 x 815	200	
BAT702302260	3000	2	215 x 580 x 815	235	

Other capacities and terminal types: at request

12,8V 300Ah LiFePO4 Battery

Li-ion app

Why lithium-iron-phosphate?

Lithium-iron-phosphate (LiFePO4 or LFP) is the safest of the mainstream li-ion battery types. The nominal voltage of a LFP cell is 3,2V (lead-acid: 2V/cell). A 12,8V LFP battery therefore consists of 4 cells connected in series; and a 25,6V battery consists of 8 cells connected in series.

Rugged

A lead-acid battery will fail prematurely due to sulfation:

- If it operates in deficit mode during long periods of time (i.e. if the battery is rarely, or never at all, fully charged).
- If it is left partially charged or worse, fully discharged (yacht or mobile home during wintertime).

A LFP battery does not need to be fully charged. Service life even slightly improves in case of partial charge instead of a full charge. This is a major advantage of LFP compared to lead-acid.
Other advantages are the wide operating temperature range, excellent cycling performance, low internal resistance and high efficiency (see below).

LFP is therefore the chemistry of choice for demanding applications.

Efficient

In several applications (especially off-grid solar and/or wind), energy efficiency can be of crucial importance.
The round-trip energy efficiency (discharge from 100% to 0% and back to 100% charged) of the average lead-acid battery is 80%.
The round-trip energy efficiency of a LFP battery is 92%.
The charge process of lead-acid batteries becomes particularly inefficient when the 80% state of charge has been reached, resulting in efficiencies of 50% or even less in solar systems where several days of reserve energy is required (battery operating in 70% to 100% charged state).
In contrast, a LFP battery will still achieve 90% efficiency under shallow discharge conditions.

Size and weight

Saves up to 70% in space
Saves up to 70% in weight

Expensive?

LFP batteries are expensive when compared to lead-acid. But in demanding applications, the high initial cost will be more than compensated by longer service life, superior reliability and excellent efficiency.

Bluetooth

With Bluetooth cell voltages, temperature and alarm status can be monitored.
Very useful to localize a (potential) problem, such as cell imbalance.

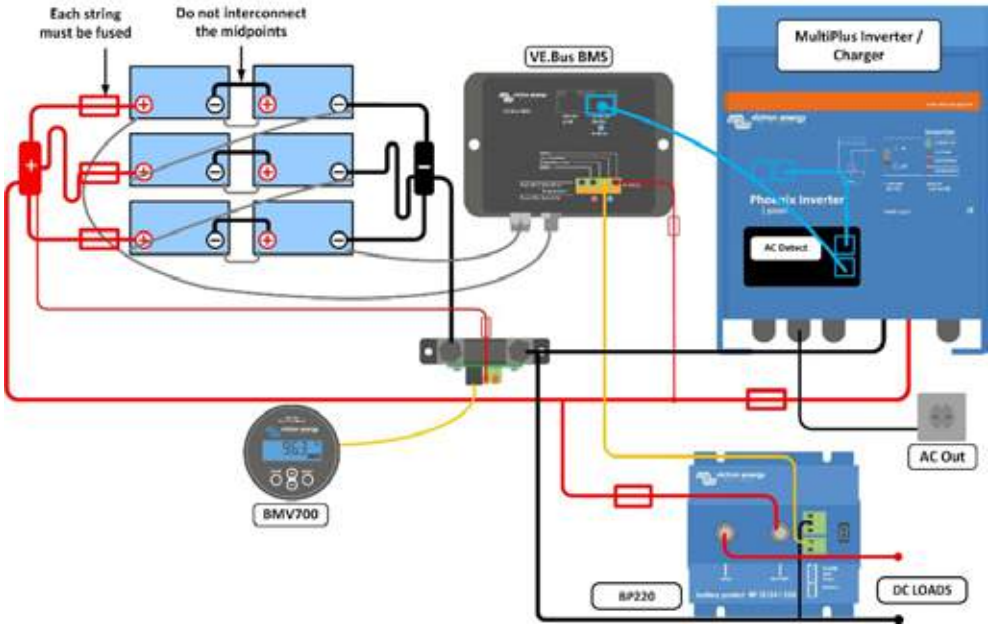

Our LFP batteries have integrated cell balancing and cell monitoring. Up to 5 batteries can be paralleled and up to four 12V batteries or two 24V batteries can be series connected, so that a 48V battery bank of up to 1500Ah can be assembled. The cell balancing/monitoring cables can be daisy-chained and must be connected to a Battery Management System (BMS).

Battery Management System (BMS)

The BMS will:

1. Generate a pre-alarm whenever the voltage of a battery cell decreases to less than 3,1V (adjustable 2,85-3,15V).
2. Disconnect or shut down the load whenever the voltage of a battery cell decreases to less than 2,8V (adjustable 2,6V-2,8V).
3. Stop the charging process whenever the voltage of a battery cell increases to more than 4,2V.
4. Shut down the system whenever the temperature of a cell exceeds 50°C.

See the BMS datasheets for more features

Battery specification

VOLTAGE AND CAPACITY	LFP-Smart 12,8/60	LFP-Smart 12,8/100	LFP-Smart 12,8/150	LFP-Smart 12,8/160-a	LFP-Smart 12,8/200-a	LFP-Smart 12,8/300	LFP-Smart 25,6/200
Nominal voltage	12,8V	12,8V	12,8V	12,8V	12,8V	12,8V	25,6V
Nominal capacity @ 25°C*	60Ah	100Ah	150Ah	160Ah	200Ah	300Ah	200Ah
Nominal capacity @ 0°C*	48Ah	80Ah	125Ah	130Ah	160Ah	240Ah	160Ah
Nominal capacity @ -20°C*	30Ah	50Ah	75Ah	80Ah	100Ah	150Ah	100Ah
Nominal energy @ 25°C*	768Wh	1280Wh	1920Wh	2048Wh	2560Wh	3840Wh	5120Wh
*Discharge current ≤1C							
CYCLE LIFE (capacity ≥ 80% of nominal)							
80% DoD	2500 cycles						
70% DoD	3000 cycles						
50% DoD	5000 cycles						
DISCHARGE							
Maximum continuous discharge current	120A	200A	300A	320A	400A	600A	400A
Recommended continuous discharge current	≤60A	≤100A	≤150A	≤160A	≤200A	≤300A	≤200A
End of discharge voltage	11,2V	11,2V	11,2V	11,2V	11,2V	11,2V	22,4V
OPERATING CONDITIONS							
Operating temperature	Discharge: -20°C to +50°C Charge: +5°C to +50°C						
Storage temperature	-45°C to +70°C						
Humidity (non-condensing)	Max. 95%						
Protection class	IP 22						
CHARGE							
Charge voltage	Between 14V/28V and 14,4V/28,8V (14,2V/28,4V recommended)						
Float voltage	13,5V/27V						
Maximum charge current	120A	200A	300A	320A	400A	600A	400A
Recommended charge current	≤30A	≤50A	≤75A	≤80A	≤100A	≤150A	≤100A
OTHER							
Max storage time @ 25°C*	1 year						
BMS connection	Male + female cable with M8 circular connector, length 50cm						
Power connection (threaded inserts)	M8	M8	M8	M10	M10	M10	M8
Dimensions (hxwxd) mm	240 x 285 x132	197 x 321 x 152	237 x 321 x 152	237 x 321 x 152	237 x 321 x 152	347 x 425 x 274	317 x 631 x 208
Weight	12kg	15kg	20kg	20kg	22kg	51kg	56kg
*When fully charged							

VE.Bus BMS

Protects each individual cell of a Victron lithium iron phosphate ($LiFePO_4$ or LFP) battery

Each individual cell of a $LiFePO_4$ battery must be protected against over voltage, under voltage and over temperature. Victron LiFePO4 batteries have integrated Balancing, Temperature and Voltage control (acronym: BTV) and connect to the VE.Bus BMS with two M8 circular connector cord sets.
The BTVs of several batteries can be daisy chained. Up to five batteries can be paralleled and up to four batteries can be series connected (BTVs are simply daisy-chained) so that a 48V battery bank of up to 1500Ah can be assembled. Please see our LiFePO4 battery documentation for details.
The BMS will:

- shut down or disconnect loads in case of imminent cell under voltage,
- reduce charge current in case of imminent cell overvoltage or over temperature (VE.Bus products only, see below), and
- shut down or disconnect battery chargers in case of imminent cell overvoltage or over temperature.

Protects 12V, 24V and 48V systems

The operating voltage range of the BMS: 9 to 70V DC.

Communicates with all VE.Bus products

The VE.Bus BMS connects to a MultiPlus, Quattro or Phoenix inverter with a standard RJ45 UTP cable.

Other products, without VE.Bus, can be controlled as shown below:

Load Disconnect

The Load Disconnect output is normally high and becomes free floating in case of imminent cell under voltage (default 3,1V/cell, adjustable on the battery between 2,85V and 3,15V per cell).
Maximum current: 2A.
The Load Disconnect output can be used to control

- the remote on/off of a load, and/or
- the remote on/off of an electronic load switch (Battery Protect)

Pre-alarm

The pre-alarm output is normally free floating and becomes high in case of imminent cell under voltage (default 3,1V/cell, adjustable on the battery between 2,85V and 3,15V per cell).
Maximum current: 1A (not short circuit protected).
The minimum delay between pre-alarm and load disconnect is 30 seconds.

Charge Disconnect

The Charge Disconnect output is normally high and becomes free floating in case of imminent cell over voltage or over temperature. Maximum current: 10mA.
The Charge Disconnect output can be used to control

- the remote on/off of a charger and/or
- a Cyrix-Li-Charge relay and/or
- a Cyrix-Li-ct Battery Combiner

LED indicators

- **Enabled (blue):** VE.Bus products are enabled.
- **Cell>4V or temperature (red):** charge disconnect output low because of imminent cell over voltage or over temperature.
- **Cell>2,8V (blue):** load disconnect output high.

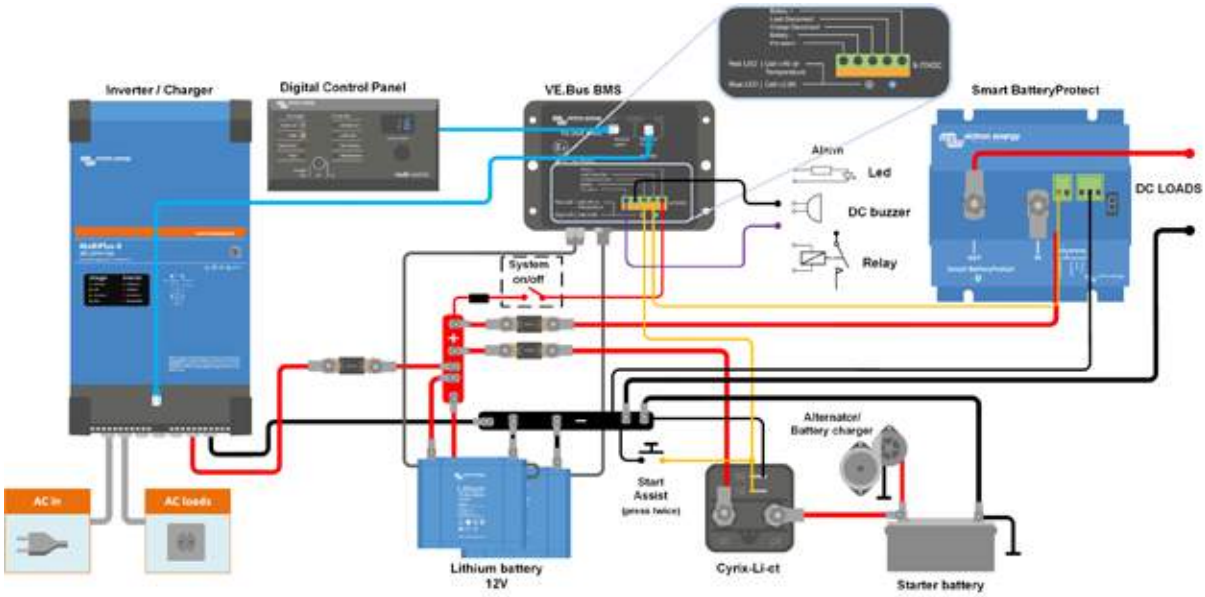

Figure 1: Application example for a vehicle or boat.
A Cyrix Li-ion Battery Combiner is used to connect to the starter battery and alternator.
The UTP cable to the inverter/charger also provides the minus connection to the BMS.

VE.Bus BMS	
Input voltage range	9 – 70V DC
Current draw, normal operation	10 mA (excluding Load Disconnect current)
Current draw, low cell voltage	2mA
Load Disconnect output	Normally high Source current limit: 2A Sink current: 0 A (output free floating)
Charge Disconnect output	Normally high Source current limit: 10mA Sink current: 0 A (output free floating)
Pre-alarm output	Normally free floating High (Vbat) in case of alarm, max. 1A (not short circuit proof)
GENERAL	
VE.Bus communication port	Two RJ45 sockets to connect to all VE.Bus products
Operating temperature	-20 to +50°C 0 - 120°F
Humidity	Max. 95% (non-condensing)
Protection grade	IP20
ENCLOSURE	
Material and colour	ABS, matt black
Weight	0,1kg
Dimensions (h x w x d)	105 x 78 x 32mm
STANDARDS	
Standards: Safety Emission Immunity Automotive	EN 60950 EN 61000-6-3, EN 55014-1 EN 61000-6-2, EN 61000-6-1, EN 55014-2 Regulation UN/ECE-R10 Rev.4

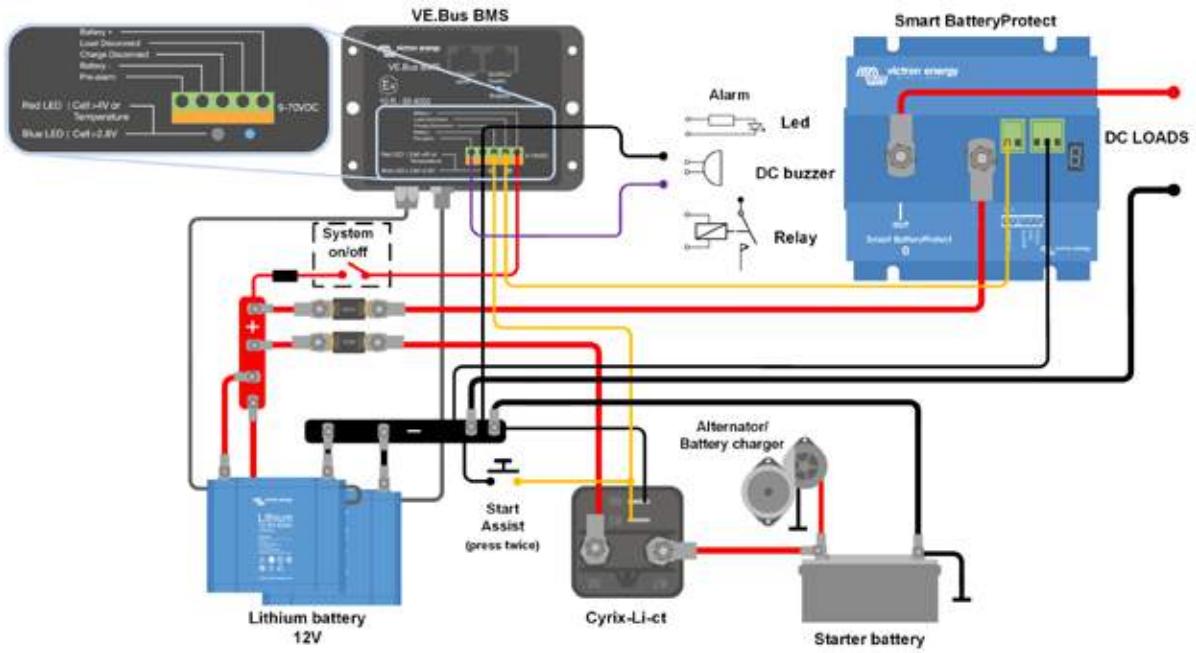

Figure 2: Application example for a vehicle or boat, without inverter/charger.

Cyrix Combiners especially designed for use with the VE.Bus BMS:

Cyrix-Li-ct (120A or 230A)
Is a battery combiner with a Li-ion adapted engage/disengage profile and a control terminal to connect to the Charge Disconnect of the BMS.

Cyrix-Li-Charge (120A or 230A)
Is a unidirectional combiner to insert in between a battery charger and the LFP battery. It will engage only when charge voltage from a battery charger is present on its charge-side terminal. A control terminal connects to the Charge Disconnect of the BMS.

24V 180Ah Lithium-ion battery and Lynx-ion

24V 180Ah and 100Ah
Lithium-Ion Battery

Lynx Ion + Shunt

Ion control: Main screen

Ion control: History screen

Ion control: Lynx Ion Status

The advantages of a Lithium-ion battery over conventional lead-acid batteries

- High energy density: more energy with less weight;
- High charge currents (shortens the charge period);
- High discharge currents (enabling for example electrical cooking on a small battery bank);
- Long battery life (up to six times the battery life of a conventional battery);
- High efficiency between charging and discharging (very little energy loss due to heat development);
- Higher continuous power available.

Why Lithium-Iron-Phosphate?

Lithium-Iron-Phosphate (LiFePO4 or LFP) is the safest of the mainstream Li-ion battery types. The nominal voltage of a LFP cell is 3,2V (lead-acid: 2V/cell). A 25,6V LFP battery consists of 8 cells connected in series.

Complete system

A complete system consists of:

- One or more **24V 180Ah or 100Ah Lithium-Ion batteries**.
- (optional) The **Lynx Power In**, a modular dc bus bar.
- The **Lynx Ion + Shunt** is the Battery Management System (BMS) that controls the batteries. It contains a main safety contactor and a shunt. There are two models are available: a 350A model and a 600A model.
  (optional) The **Lynx Distributor**, a DC distribution system with fuses.
- (optional) The **Ion Control**, a digital control panel.
- (optional) The **Color Control GX**, a more advanced digital control panel

The advantages of the Victron Lynx Lithium-ion battery system

The modular system used adds the following advantages:

- The Victron Lithium-Ion Battery System is easy to install due to its modularity. No complicated wiring diagrams are required.
- Detailed information is available on the waterproof Ion Control display.
- The relay in the Lynx-Ion + Shunt provides maximum safety: in case the chargers or loads do not respond to the commands from the Lynx-Ion + Shunt, the main safety relay will open to prevent permanent damage to the batteries.
- For typical marine installations there is an extra small output, so you can still power the bilge pump while disconnecting all other house loads by opening the main relay.

24V 180Ah/100Ah Lithium-Ion Batteries

The base of the Victron Lithium-Ion Battery System is formed by individual 24V/180Ah Lithium-ion batteries. They have a built-in Cell Management System (BMS) which protects the battery on a cell level. It monitors individual cell voltage and system temperature, and actively balances the individual cells. All measured parameters are sent to the Lynx Ion which monitors the system as a whole.

Lynx Ion + Shunt

The Lynx Ion + Shunt is the BMS. It contains the safety contactor, and controls the cell-balancing, charging and discharging of the system. Also, it keeps track of the State of Charge of the batteries and calculates the Time to Go. It protects the battery pack from both overcharging and depletion. When an overcharge is imminent, it will signal the charging devices to decrease or stop charging. This is done with the VE.Can bus (NMEA2000) compatible, and also via the two available open/close contacts. Same when the battery is nearing empty, and there is no charging capability available. It will signal big loads to switch off.

For both overcharging and depletion there is a last safety resort, the built-in 350A or 600 A contactor. In case signalling does not stop the imminent overcharge or depletion, it will open the contactor.

VE.Can / NMEA2000 Canbus

Communication with the outside world is done via the VE.Can protocol.

Ion Control

See the separate Ion Control datasheet for more information.

Color Control GX

See the separate Color Control GX datasheet for more information.

Lithium-Ion battery specifications

	Lithium-ion 24V 100Ah 2.6kWh battery	Lithium-ion 24V 180Ah 4.75kWh battery
Technology	Lithium iron phosphate (LiFePO4)	Lithium iron phosphate (LiFePO4)
Nominal voltage	25,6V	25,6V
Nominal capacity	100Ah	180Ah
Nominal power	2,6kWh	4,75kWh
Weight	30kg	55kg
Power/Weight ratio	86Wh/kg	86Wh/kg
Dimensions (lxwxh)	592 x 154 x 278 mm	623 x 193 x 351 mm
Charge/Discharge		
Charge cut-off voltage at 0.05C	28,8V	28,8V
Discharge cut-off voltage	20V	20V
Recommended charge/discharge current	30A (0,3C)	54A (0,3C)
Maximum charge current (1C)	100A	180A
Maximum discharge current (1.5C)	150A	270A
Pulse discharge current (10s)	500A	1000A
Cycle Life @80% DOD (0.3C)	3000	3000
Configuration		
Series configuration	Yes, up to 2 (more in series on request)	Yes, up to 2 (more in series on request)
Parallel configuration	Yes, easy up to 10 (more parallel on request)	Yes, easy up to 10 (more parallel on request)
Environmental		
Operating temp. charge	0~45°C	0~45°C
Operating temp. discharge	-20~55°C	-20~55°C
Storage temp.	-20~45°C	-20~45°C
Standards		
EMC: Emission	EN-IEC 61000-6-3:2007/A1:2011/C11:2012	
EMC: Immunity	EN-IEC 61000-6-1:2007	
Low voltage directive	EN 60335-1:2012/AC:2014	

Lynx Ion + Shunt specifications

Lynx Ion + Shunt	350A	600A
Maximum number batteries in series	2 (= 48 VDC)	
Maximum number batteries in parallel	48	
Supply voltage range	9 ... 60VDC	
Standby mode	73mW @ 26,2V and 138mW @ 52,4V	
Active mode	8,7 W	
Main safety contactor	350A	600A
Enclosure		
Material	ABS	
Weight	2,0kg	
Dimensions (lxwxh)	185 x 165 x 85 mm	
IO		
Aux. output	5A (output voltage = battery voltage), short circuit protection	
External safety contactor	5A (output voltage = battery voltage), short circuit protection	
Allow-to-charge	1A @ 60VDC, potential free	
Allow-to-discharge	1A @ 60VDC, potential free	
External status signal	12V / 140mA	
Environmental		
Operating temperature range	-20 °C to 50 °C	
Humidity	Max. 95% (non-condensing)	
Protection class	IP22	IP20
Standards		
EMC: Emission	EN-IEC 61000-6-3:2007/A1:2011/C11:2012	
EMC: Immunity	EN-IEC 61000-6-1:2007	
Low voltage directive	EN 60335-1:2012/AC:2014	
RoHs	EN 50581:2012	

24V/100Ah HE battery

24V/200Ah HE battery

Lynx-ion BMS 1000A

Ultra-high energy density
185Wh/kg thanks to Lithium Nickel Manganese Cobalt Oxide (NMC) technology

Fan cooled
For high charge and discharge currents (up to 2C for short periods)

Parallel and series connection
Up to 64 batteries can be parallel connected.
For 48V systems two batteries can be connected in series, and up to 32 strings of two batteries can be parallel connected.

Galvanically isolated CAN-Bus communication
Protocol: VE.Can/NMEA2000

Lynx-ion BMS: 400A or 1000A
The Lynx-ion BMS reduces wiring and installation time to a minimum: it combines four fused battery connections, four fused DC load connections, a safety contactor and a current shunt with a BMS in one compact enclosure.

Monitoring: The Color Control GX or Venus GX
Monitors the complete system.
Is the gateway for remote monitoring on the VRM online portal.
Adds an amazing amount of useful functionality to system (such as a very sophisticated generator start-stop program
See the Color Control GX and Venus GX datasheet for more information.

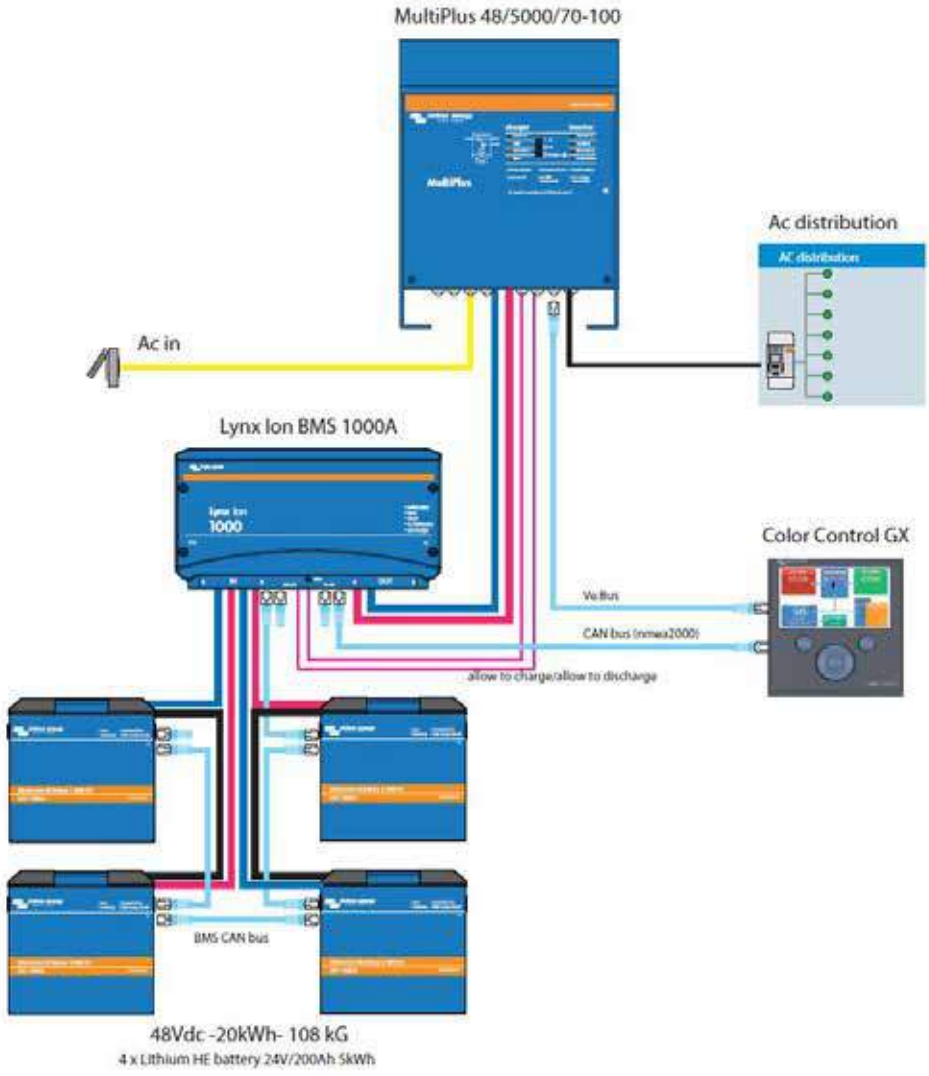

Lithium HE battery	24V / 100Ah	24V / 200Ah
Technology	Lithium-Ion NMC	Lithium-Ion NMC
Cell configuration	7S32P	7S64P
Nominal voltage	25,2 V	25,2 V
Nominal capacity	100 Ah	200 Ah
Nominal energy	2,5 kWh	5,0 kWh
Cycle Life @80% DoD (0,3C)	2000	2000
Energy/weight ratio (incl. BMS and enclosure)	159 Wh/kg	175 Wh/kg
Weight (incl. BMS and enclosure)	15,7 kg	28,6 kg
Discharge		
Discharge cut-off voltage	21 V	21 V
Recommended discharge current	30 A (0.3 C)	60 A (0.3 C)
Maximum discharge current (10 minutes)	150 A (1.5 C)	300 A (1.5 C)
Fuses	150 A, fuse inside	300 A, fuse inside
Charge		
Absorption voltage (1 hour)	28,4 V	28,4 V
Float voltage	27,5 V	27,5 V
Maximum charge current	100 A (1 C)	200 A (1 C)
Recommended charge current	30 A (0.3 C)	60 A (0.3 C)
Configuration		
Series configuration	Yes, up to 2	
Parallel configuration	Yes, up to 96	
Temperature		
Operating temp. charge	0~45°C	
Operating temp. discharge	-20~55°C	
Storage temp.	-20~45°C	
Mechanical		
Power connections	M8 stud, Max. 15 Nm	M8 stud, Max. 15 Nm
Protection class	IP20	IP20
Cooling	Air, active (1x fan inside)	Air, active (2x fan inside)
Dimensions (l x w x h)	362 x 193 x 214 mm	362 x 193 x 355 mm
Safety		
Battery Management System (BMS)	Integrated slave BMS	
Balancing	Passive	
Compatible BMS master controller	Lynx Ion BMS	
Communication with Lynx Ion BMS	CAN bus	
Standards		
EMC: Emission	EN-IEC 61000-6-3	
EMC: Immunity	EN-IEC 61000-6-1	
Low voltage directive	EN 60335-1	

Lynx Ion BMS intended for both 100 Ah & 200Ah batteries	400A	1000A
Maximum number batteries in series	2 (= 48 VDC)	
Maximum number batteries in parallel	96 (48 V: 48 strings of two batteries	
Supply voltage range	18 to 58 VDC	
Power consumption, standby mode	73 mW @ 26,2V and 138 mW @ 52,4V	
Power consumption, active mode	8,7 W	
Main safety contactor	400A	1000A
Communication port	VE.CAN (NMEA2000, RJ45 connection, galvanically isolated)	
IO		
Auxiliary output	13,5 V / 1 A, short circuit protected	
Allow-to-charge (switched voltage)	13,5 V / 1 A, short circuit protected	
Allow-to-discharge (switched voltage)	13,5 V / 1 A, short circuit protected	
Allow-to-charge (relay output)	1 A @ 60 VDC, potential free	
Allow-to-discharge (relay output)	1 A @ 60 VDC, potential free	
Programmable contact (relay output)	1 A @ 60 VDC, potential free	
External status signal	13,5 V / 140 mA	
Enclosure		
Material	ABS	
Weight	4,6 kg	5,7 kg
Dimensions (lxwxh)	225 x 426 x 117 mm	
Environmental		
Operating temperature range	-20 °C to 50 °C	
Humidity	Max. 95% (non-condensing)	
Protection class	IP22	
Standards		
EMC: Emission	EN-IEC 61000-6-3	
EMC: Immunity	EN-IEC 61000-6-1	
Low voltage directive	EN 60335-1	

With over 45 years of experience, Victron Energy enjoys an unrivalled reputation for technical innovation, reliability and quality. Victron is a world leader in the supply of self-supporting electrical power. Our products have been designed to meet the most demanding situations faced by a diversity of craft, recreational and commercial alike. Victron's ability to meet the demand for customized off-grid systems is unprecedented. Our product range includes sine wave inverters and inverter/chargers, battery chargers, DC/DC converters, transfer switches, gel and AGM batteries, battery monitors, solar charge regulators, solar panels, complete network solutions and many other innovative solutions.

World-wide service and support

Having served the off-grid, industrial and vehicle markets as well as both the commercial and leisure marine sectors for over 45 years, Victron has an established network of dealers and distributors covering the whole world. Our customer base is such that providing prompt and competent local service is essential.

This is reflected in the capabilities of our support network. Our flexible approach to service support and our commitment to quick turnaround for repairs is market leading. There are countless examples of Victron products that have provided for decades of reliable service in the most demanding applications. This level of reliability combined with the highest level of technical know-how results in Victron Energy power systems that offer the very best value available.

Basecamp Xtreme Everest

SAL064132020
REV 03
2020-02

Victron Energy B.V.
De Paal 35 • 1351JG Almere • The Netherlands
Phone: +31 (0)36 535 97 00 • E-mail: sales@victronenergy.com
www.victronenergy.com